MA.RI.NA. PLANCIA

POS.	CODICE	I	F	D	GB	E	GT	MX
1	CP026322	VITE AUTOF.	VIS	SCHRAUBE	SCREW	TORNILLO	1	1
2	CP032907	RONDELLA	RONDELLE	SCHEIBE	WASHER	ARANDELA	2	2
3	CP032916	RONDELLA	RONDELLE	SCHEIBE	WASHER	ARANDELA	1	1
4	CP040630	VITE TTQST	VIS	SCHRAUBE	SCREW	TORNILLO	1	1
5	CP042216	BLOCCHETTO CAVO F	ATTACHE CABLE FRE	KABELBESCHWERER	CLIP	FIJADOR CABLE	1	1
6	CP042806	DADO	ÉCROU	MUTTER	KNOB	ESPARRAGO	2	2
7	CP044906	DADO	ÉCROU	MUTTER	KNOB	ESPARRAGO	2	2
8	CP050224	LEVA DI COMANDO	LEVIER	STANGE	LEVER	LEVA	1	1
9	CP050225	PLANCIA GRIGIA 7035	TABLEAU DE BORD	ARMATURENBRETT	DASH-BOARD	PLACA DEL MANILLAR	1	
9	CP050225.23	PLANCIA ARGENTO	TABLEAU DE BORD	ARMATURENBRETT	DASH-BOARD	PLACA DEL MANILLAR		1
10	CP050243	STAFFETTA REGISTR	EQUARRE	WINKELMASS	BRACKET	ABRAZDERA CABLE	1	1
11	CP053238	RONDELLA	RONDELLE	SCHEIBE	WASHER	ARANDELA	1	1
12	CP053710	DECALCO	DECALQUE	ETIKETTE	DECAL	CARTEL	1	1
14	CP053911	DECALCO	DECALQUE	ETIKETTE	DECAL	CARTEL	1	1
17	CP060630	VITE TC	VIS	SCHRAUBE	SCREW	TORNILLO	2	2
18	CP060640	VITE TC	VIS	SCHRAUBE	SCREW	TORNILLO	1	1
20	?-TAB-AC-PC	CAVO ACCELERATOR	CABLE GAZ	KABEL	CABLE	CABLE	1	1
21	?-TAB-FR	CAVO FRENO	CABLE FREIN	KABEL	CABLE	CABLE	1	1

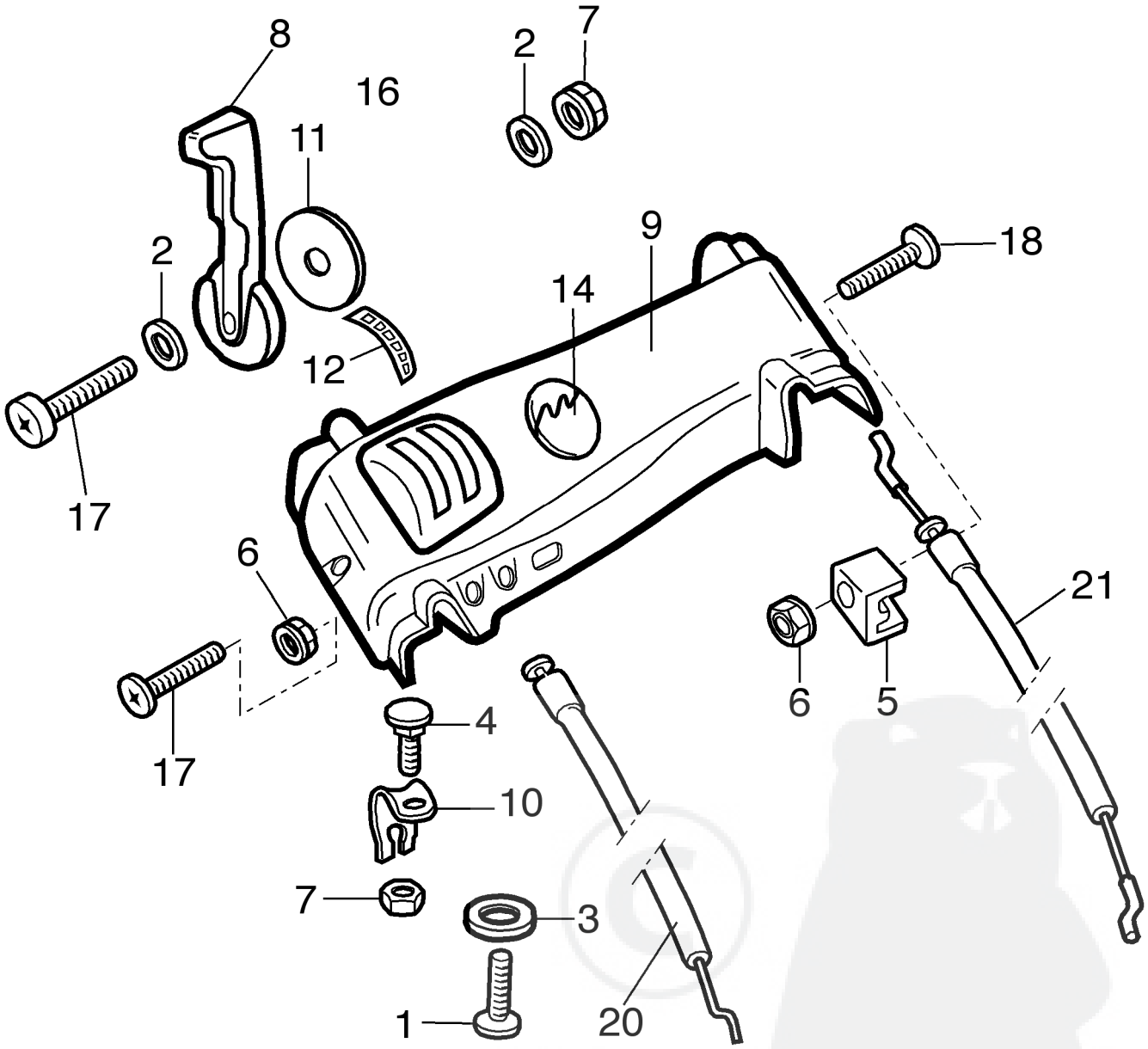
8
16
2
7
11
9
18
2
14
12
17
6
21
6
5
17
4
10
7
3
1
20