BRUSH CUTTER
DESBROZADORA
DEBROUSSAILLEUSE
ROÇADORAS
DECESPUGLIATORI
DRAAGBARE BOSMAAIER
TRAGBARE MOTORSENSE

Model	**V241LPS**
Modelo	**V241W**
Modèle	**V26LPS**
Modelo	**V26W**
Modèllo	**V28LS**
Model	**V28W**
Model	**V28FW**
	V28FHW
	VG404DXLPS
	VG504DXLP

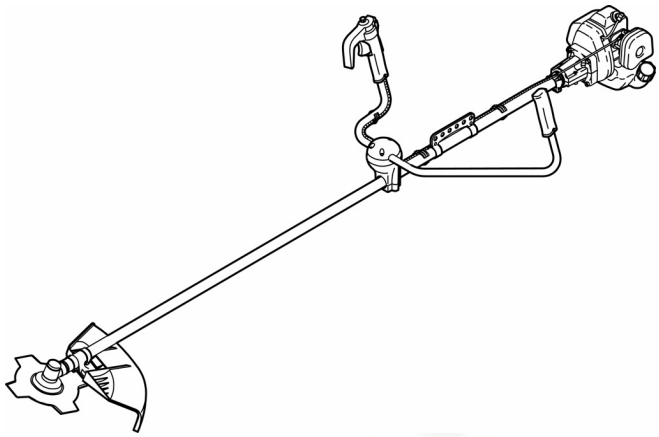

(ENGLISH) OPERATING MANUAL
(ESPAÑOL) MANUAL DE INSTRUCCIONES
(FRANÇAIS) MANUAL DE FONCTIONNEMENT
(PORTUGUÊS) MANUAL DE INSTRUÇÕES
(ITALIANO) MANUAL DI USO E MANUTENZIONE
(NEDERLANDS) HANDLEIDING
(DEUTSCH) BEDIENUNGSANLEITUNG

MARUNAKA CO.,LTD.
11MUKAIDANISHI-MACHI.KISSHOIN.MINAMI-KU.KYOTO,JAPAN.601-8307
info-e@marunaka-japan.co.jp
http://www.marunaka-japan.co.jp

CODE: 800202597
0610

Contents

ENGLISH

TECHNICAL DATA

Model			V241LPS			V241W			V26LPS					V26W					V28LS			
Engine			TU26PFD	TJ27DX	GX25	TU26PFD	TJ27DX	GX25	TL33PFD	TL43PFD	TH34DX	TH43DX	GX35	TL33PFD	TL43PFD	TH34DX	TH43DX	GX35	TL43PFD	TL50PFD	TH43DX	TH48DX
Masses	Unit without cutting attachment, empty tank	kg	5.50	5.40	5.90	5.85	5.75	6.25	6.90	7.60	6.60	7.35	7.10	7.65	8.35	7.35	8.10	7.85	7.85	7.90	7.65	7.65
	Unit with specified cutting attachment, empty tank	kg	5.90	5.80	6.30	6.25	6.15	6.65	7.40	8.10	7.10	7.80	7.50	8.15	8.85	7.85	8.60	8.35	8.35	8.40	8.15	8.15
	Unit with specified cutting attachment, full tank	kg	6.40	6.30	6.80	6.75	6.65	7.15	8.15	8.85	7.76	8.63	8.05	8.90	9.60	8.51	9.43	8.90	9.10	9.15	8.98	8.98
Volume	Fuel tank	l	0.6	0.6	0.55	0.6	0.6	0.55	0.9	0.9	0.8	1.0	0.65	0.9	0.9	0.8	1.0	0.65	0.9	0.9	1.0	1.0
Cutting attachment	Usable cutting depth of specified cutting attachment	mm	35						35					35					35			
	Specified blade diameter	mm	230						255					255					255			
	Specified blade thickness	mm	1.4						1.4					1.4					1.4			
	Number of cutting teeth		3 or 4 or 8						3 or 4 or 8					3 or 4 or 8					3 or 4 or 8			
	Blade center hole diameter	mm	25.4						25.4					25.4					25.4			
	Blade rotational speed at maximum allowed engine speed	rpm	8000						8000					8000					8000			
Gear ratio			1.36						1.36					1.36					1.36			
Rotational direction of output shaft			Seen from above anticlockwis																			
External dimensions	Length	mm	1804	1820	1853	1804	1820	1853	1844	1864	1838	1870	1892	1844	1864	1838	1870	1892	1864	1864	1870	1870
	Width	mm	400	400	400	690	690	690	400	400	400	400	400	690	690	690	690	690	400	400	400	400
	Height	mm	253	253	253	500	500	500	253	253	253	253	253	500	500	500	500	500	253	253	253	253
Engine displacement		cm^3	25.6	26.3	25	25.6	26.3	25	32.6	42.7	33.3	43.2	35.8	32.6	42.7	33.3	43.2	35.8	42.7	49.4	43.2	48.6
Maximum shaft brake power,measured in accordance with ISO 8893		kW	1.04	1.20	0.81	1.04	1.20	0.81	1.25	1.55	1.4	1.32	1.2	1.25	1.55	1.4	1.32	1.2	1.55	1.75	1.32	1.40
Rotational speeds	Engine speed at maximum power	rpm	7500	7500	7000	7500	7500	7000	6800	6600	7000	7000	7000	6800	6600	7000	7000	7000	6600	6600	7000	6200
	Recommended maximum engine speed	rpm	8000	8000	7000	8000	8000	7000	8000	8000	8000	7800	7000	8000	8000	8000	7800	7000	8000	7600	7800	7500
	Output shaft speed	rpm	7000	7000	6500	7000	7000	6500	7400	7600	7200	7200	6500	7400	7600	7200	7200	6500	7600	7000	7200	6800
	Recommended engine idling speed	rpm	2700	3000	3100	2700	3000	3100	2800	2800	2800	2800	3100	2800	2800	2800	2800	3100	2800	2800	2800	2800
	Engine speed at beginning of clutch engagement	rpm	4000	4000	4100	3600	4000	4100	3800	3800	3600	3800	4100	3800	3800	3600	3800	4100	3800	3800	3800	3800
Fuel consumption	Fuel consumption at maximum engine power	l/h	0.70	0.75	0.4	0.70	0.75	0.4	0.72	1.55	0.88	0.90	0.42	0.72	1.55	0.88	0.90	0.42	1.55	1.74	0.90	0.87
	Specified fuel consumption at maximum engine power	g/(kW·h)	590	598	340	590	598	340	504	875	623	598	360	504	875	623	598	360	875	870	598	544
Sound pressure levels	Idling (L_{p1})	dB	76	76	77	76	76	77	77	77	76	78	77	77	77	76	78	77	77	78	78	78
	Racing (L_{pR})	dB	89	88	90	89	88	90	90	91	89	92	91	90	91	89	92	91	91	92	92	92
Sound power levels	Idling (L_{w1})	dB	86	85	84	86	85	84	86	87	86	88	85	86	87	86	88	85	87	88	88	88
	Racing (L_{wR})	dB	103	101	100	103	101	100	103	103	102	103	101	103	103	102	103	101	103	104	103	104
	(L_{wcq})	dB	99	98	97	99	98	97	100	101	99	100	98	100	101	99	100	98	101	101	100	101
Guaranteed sound power level (L_{wA})		dB	103	103	103	103	103	103	105	105	105	105	105	105	105	105	105	105	106	106	106	106
Vibration levels	Idling	m/s^2	3.2	3.5	3.3	3.1	2.3	2.2	3.4	3.5	3.3	3.4	3.5	3.4	3.5	3.3	3.3	3.3	3.7	4.1	3.7	4.0
	Full load	m/s^2	5.0	4.9	4.8	3.9	3.5	3.4	4.6	4.7	4.2	4.5	4.2	4.6	4.7	4.2	4.4	4.0	5.2	5.3	4.8	5.1
	Racing	m/s^2	9.2	11.0	6.5	4.9	4.3	4.1	5.9	6.0	5.5	5.7	5.6	5.9	6.0	5.5	5.5	5.4	6.5	6.6	5.8	6.0

TECHNICAL DATA

Model			V28W				V28FW				V28FHW				VG404DXLPS				VG504DXLP			
Engine			TL43PFD	TL50PFD	TH43DX	TH48DX	TL43PFD	TL50PFD	TH43DX	TH48DX	TL43PFD	TL50PFD	TH43DX	TH48DX	TL43PFD	TL50PFD	TH43DX	TH48DX	TL50PFD	TH48DX		
Masses	Unit without cutting attachment, empty tank	kg	8.60	8.65	8.40	8.40	8.65	8.70	8.45	8.45	8.35	8.40	8.15	8.15	12.25	12.30	11.95	11.95	12.35	12.00		
	Unit with specified cutting attachment, empty tank	kg	9.10	9.15	8.90	8.90	9.15	9.20	8.95	8.95	8.85	8.90	8.65	8.65	12.75	12.80	12.45	12.45	12.85	12.50		
	Unit with specified cutting attachment, full tank	kg	9.85	9.90	9.73	9.73	9.90	9.95	9.78	9.78	9.60	9.65	9.48	9.48	13.45	13.50	13.25	13.25	13.55	13.30		
Volume	Fuel tank	l	0.9	0.9	1.0	1.0	0.9	0.9	1.0	1.0	0.9	0.9	1.0	1.0	0.9	0.9	1.0	1.0	0.9	1.0		
Cutting attachment	Usable cutting depth of specified cutting attachment	mm	35				35				35				35				35			
	Specified blade diameter	mm	255				255				255				255				255			
	Specified blade thickness	mm	1.4				1.4				1.4				1.4				1.4			
	Number of cutting teeth		3 or 4 or 8				3 or 4 or 8				3 or 4 or 8				3 or 4 or 8				3 or 4 or 8			
	Blade center hole diameter	mm	25.4				25.4				25.4				25.4				25.4			
	Blade rotational speed at maximum allowed engine speed	rpm	8000				8000				8000				8000				8000			
Gear ratio			1.36				1.29				1.29				1.36				1.36			
Rotational direction of output shaft			Seen from above anticlockwis																			
External dimensions	Length	mm	1864	1864	1870	1870	1864	1864	1870	1870	1864	1864	1870	1870	2900	2900	2900	2900	2900	2900		
	Width	mm	690	690	690	690	690	690	690	690	690	690	690	690	400	400	400	400	400	400		
	Height	mm	500	500	500	500	500	500	500	500	500	500	500	500	560	560	560	560	560	560		
Engine displacement		cm^3	42.7	49.4	43.2	48.6	42.7	49.4	43.2	48.6	42.7	49.4	43.2	48.6	42.7	49.4	43.2	48.6	49.4	48.6		
Maximum shaft brake power,measured in accordance with ISO 8893		kW	1.55	1.75	1.32	1.40	1.55	1.75	1.32	1.40	1.55	1.75	1.32	1.40	1.55	1.75	1.32	1.4	1.75	1.4		
Rotational speeds	Engine speed at maximum power	rpm	6600	6600	7000	6200	6600	6600	7000	6200	6600	6600	7000	6200	6600	6600	7000	6200	6600	6200		
	Recommended maximum engine speed	rpm	8000	7600	7800	7500	8000	7600	7800	7500	8000	7600	7800	7500	8000	7600	7800	7500	7600	7500		
	Output shaft speed	rpm	7600	7000	7200	6800	7600	7000	7200	6800	7600	7000	7200	6800	7600	7000	7200	6800	7000	6800		
	Recommended engine idling speed	rpm	2800	2800	2800	2800	2800	2800	2800	2800	2800	2800	2800	2800	2800	2800	2800	2800	2800	2800		
	Engine speed at beginning of clutch engagement	rpm	3800	3800	3800	3800	3800	3800	3800	3800	3800	3800	3800	3800	3800	3800	3800	3800	3800	3800		
Fuel consumption	Fuel consumption at maximum engine power	l/h	1.55	1.74	0.90	0.87	1.55	1.74	0.90	0.87	1.55	1.74	0.90	0.87	1.55	1.74	0.9	0.9	1.74	0.9		
	Specified fuel consumption at maximum engine power	g/(kW·h)	875	870	598	544	875	870	598	544	875	870	598	544	875	870	598	644	870	644		
Sound pressure levels	Idling (L_{p1})	dB	77	78	78	78	77	78	78	78	77	78	78	78	77	78	78	78	78	78		
	Racing (L_{pR})	dB	91	92	92	92	91	92	92	92	91	92	92	92	91	92	92	92	92	92		
Sound power levels	Idling (L_{w1})	dB	87	88	88	88	87	88	88	88	87	88	88	88	87	88	88	88	88	88		
	Racing (L_{wR})	dB	103	104	103	104	103	104	103	104	103	104	103	104	104	104	103	104	104	104		
	(L_{wcq})	dB	101	101	100	101	101	101	100	101	101	101	100	101	100	101	100	101	101	101		
Guaranteed sound power level (L_{wA})		dB	106	106	106	106	106	106	106	106	106	106	106	106	105	105	105	105	106	106		
Vibration levels	Idling	m/s^2	3.6	3.9	3.5	3.8	3.6	3.9	3.7	3.8	3.6	3.9	3.7	3.8	3.4	3.4	3.3	3.8	3.4	3.8		
	Full load	m/s^2	5.0	5.1	4.6	4.9	5.0	5.1	4.8	4.9	5.0	5.1	4.8	5.0	4.5	4.6	4.4	4.9	4.6	4.7		
	Racing	m/s^2	6.3	6.4	5.6	5.8	6.3	6.4	5.7	5.8	6.3	6.4	5.7	5.8	5.8	5.9	5.5	5.8	5.8	5.7		

DECLARATION OF CONFORMITY

MARUNAKA CO.,LTD.

Address : 11,MUKAIDANISHIMACHI,KISSHOIN,MINAMI-KU,KYOTO,JAPAN 601-8307

Person in charge of keeping technical documentation : Yuichiro Manabe

Type		brush cutters																			
Model	Bar	V241LPS			V241W			V26LPS					V26W					V28LS			
	Engine	TU26PFD	TJ27DX	GX25	TU26PFD	TJ27DX	GX25	TL33PFD	TL43PFD	TH34DX	TH43DX	GX35	TL33PFD	TL43PFD	TH34DX	TH43DX	GX35	TL43PFD	TL50PFD	TH43DX	TH48DX
Unit with specified cutting attachment,full tank:kg		6.4	6.3	6.8	6.75	6.65	7.15	8.15	8.85	7.76	8.63	8.05	8.90	9.60	8.51	9.43	8.90	9.10	9.15	8.98	8.98
Serial number		???????																			
Maximum out put:kW/rpm		1.04/7500	1.2/7500	0.81/7000	1.04/7500	1.2/7500	0.81/7000	1.25/6800	1.55/6600	1.4/7000	1.32/7000	1.2/7000	1.25/6800	1.55/6600	1.4/7000	1.32/7000	1.2/7000	1.55/6600	1.75/6600	1.32/7000	1.4/7000
Measured sound power level:dB(A)		102	101	100	102	101	100	103	103	102	103	101	103	103	102	103	101	103	104	103	104
Guaranteed sound power level(L_{WA}):dB(A)		103						105					105					106			

Type		brush cutters																			
Model	Bar	V28W				V28FW				V28FHW				VG404DXLPS				VG504DXLP			
	Engine	TL43PFD	TL50PFD	TH43DX	TH48DX	TL43PFD	TL50PFD	TH43DX	TH48DX	TL43PFD	TL50PFD	TH43DX	TH48DX	TL43PFD	TL50PFD	TH43DX	TH48DX	TL50PFD	TH48DX		
Unit with specified cutting attachment,full tank:kg		9.85	9.90	9.73	9.73	9.90	9.95	9.78	9.78	9.60	9.65	9.48	9.48	13.45	13.50	13.25	13.25	13.55	13.30		
Serial number		???????																			
Maximum out put:kW/rpm		1.55/6600	1.75/6600	1.32/7000	1.4/7000	1.55/6600	1.75/6600	1.32/7000	1.4/7000	1.55/6600	1.75/6600	1.32/7000	1.4/7000	1.55/6600	1.75/6600	1.32/7000	1.4/7000	1.75/6600	1.4/7000		
Measured sound power level:dB(A)		103	104	103	104	103	104	103	104	103	104	103	104	103	104	103	104	104	104		
Guaranteed sound power level(L_{WA}):dB(A)		106				106				106				106				106			

Declare under our sole responsibility that the product,

V241LPS TU26PFD, V241LPS TJ27DX, V241LPS GX25 V241W TU26PFD, V241W TJ27DX, V241W GX25, V26LPS TL33PFD, V26LPS TL43PFD, V26LPS TH34DX, V26LPS TH43DX, V26LPS GX35, V26W TL33PFD, V26W TL43PFD, V26W TH34DX, V26W TH43DX, V26W GX35, V28LS TL43PFD, V28LS TL50PFD, V28LS TH43DX, V28LS TH48DX, V28W TL43PFD, V28W TL50PFD, V28W TH43DX, V28W TH48DX, V28FW TL43PFD, V28FW TL50PFD, V28FW TH43DX, V28FW TH48DX, V28FHW TL43PFD, V28FHW TL50PFD, V28FHW TH43DX, V28FHW TH48DX, VG404DXLPS TL43PFD, VG404DXLPS TL50PFD, VG404DXLPS TH43DX, VG404DXLPS TH48DX, VG504DXLP TL50PFD, VG504DXLP TH48DX,

to which this declaration relates is in conformity with the following the provisions of the following Directive.

89/336/EEC

98/37/EC (EN ISO 11806)

2000/14/EC Article13 Annex5

5.April.2005 KYOTO,JAPAN

PRESIDENT: Yuichiro Manabe

Yuichiro Manabe

SYMBOL MEANING

	Warning-Caution
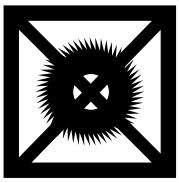	Do not use saw-blade
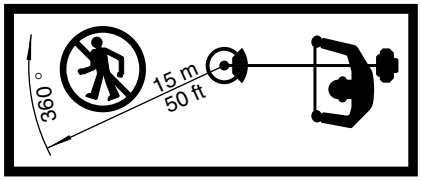	Minimum safety distance
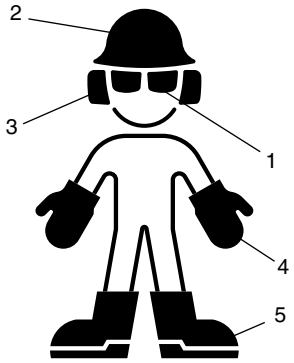	Safety clothing: 1) Approved safety glasses of face shield 2) Approved safety helmet 3) Approved ear defender 4) Approved gloves 5) Approved safety footwear
	Read operating manual carefully
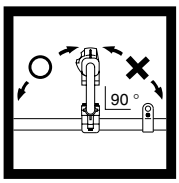	Single handle should be locked in place marked ‘○’
	Do not smoke while refuelling or while operating the machine
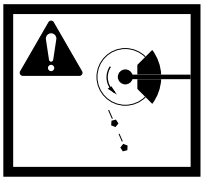	Beware of thrown objects

[1] GENERAL DESCRIPTION

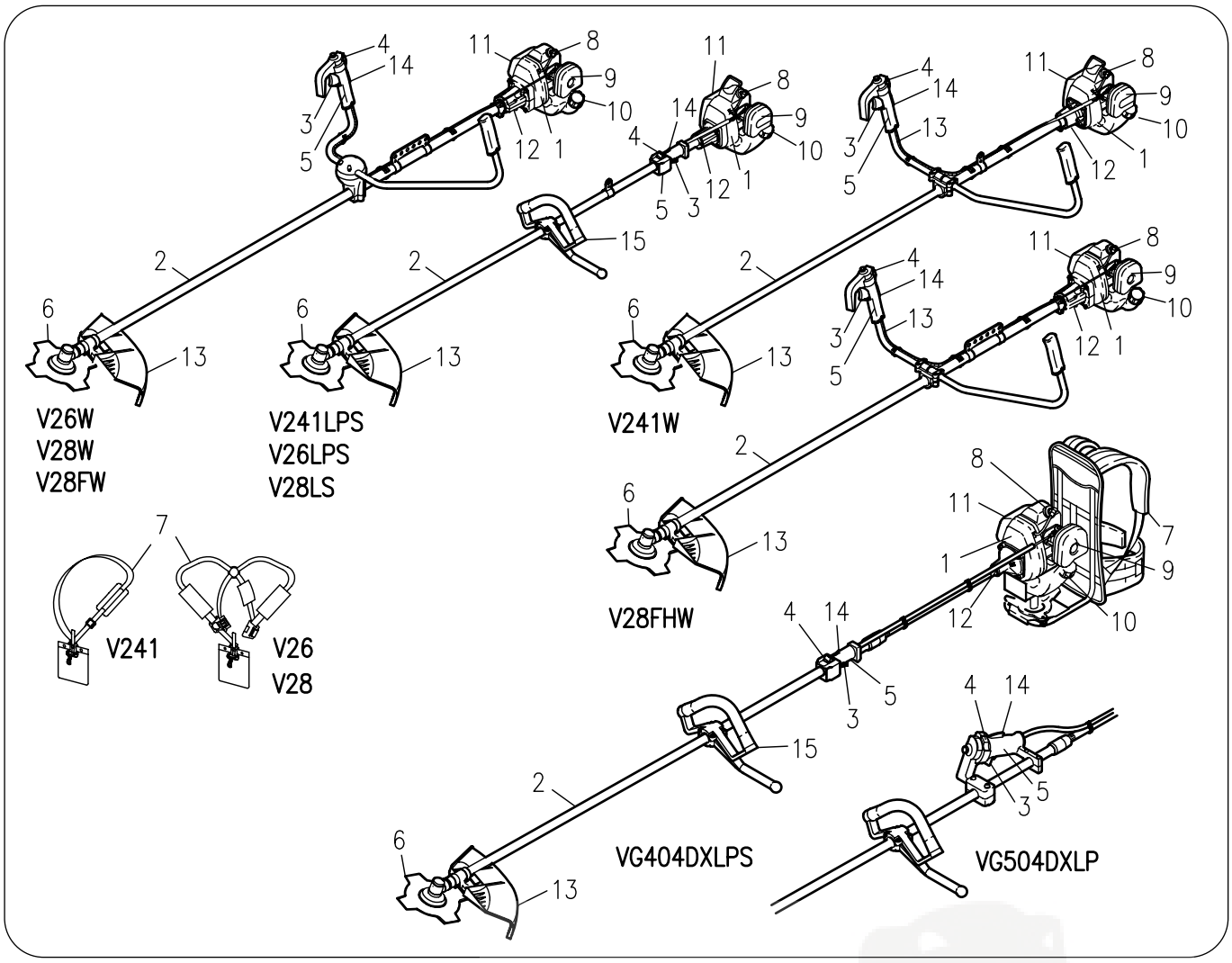

1. Engine
2. Drive shaft housing
3. Trigger
4. STOP switch/throttle advance
5. Control handle
6. Blade
7. Harness
8. Spark plug
9. Air filter cover
10. Fuel tank cap
11. Muffler
12. Clutch housing
13. Safety guard
14. Safety grip
15. Loop handle

[2] SAFETY RULES

Fig. 2-1

1. Make sure all operators study this manual carefully before using the brush cutter. Do not allow children to use the brush cutter.

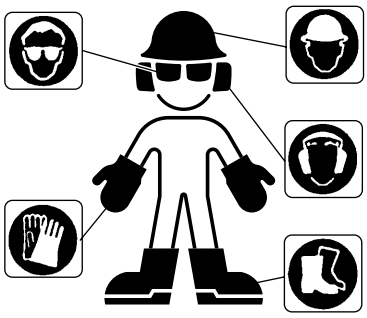

Fig. 2-2

2. When working with the brush cutter, wear suitable clothes.
   a) Close fitting protective clothes (do not wear short trousers or loose clothes)
   b) Safety shoes (do not wear sandals and do not work barefoot)
   c) Heavy-duty gloves
   d) Safety face shield or goggles
   e) Ear protection

   Make sure you know how to stop the engine and the blade in an emergency (see section STARTING AND STOPPING ENGINE). Never use the brush cutter when tired, physically indisposed or under the effect of alcohol, certain medicines or other drugs.

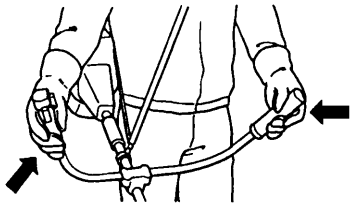

Fig. 2-3

3. Be careful. Prolonged usage of this product may expose the operator to vibration which can produce Whitefinger disease (Raynand's Phenomenon). Always hold the brush cutter firmly with both hands. When working, maintain a firm foothold. The brush cutter must be used exclusively as recommended (see section SAFETY USAGE).

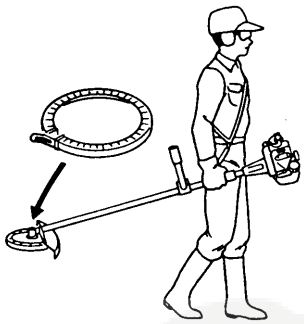

Fig. 2-4

4. Do not carry the brush cutter while the engine is running even for short distances; switch off the engine put the blade cover on the blade and carry the unit with the cutting head behind you. When carrying the brush cutter in a vehicle, secure it to prevent it from moving around. Always empty the fuel tank before transporting the unit. Start the brush cutter on a flat surface. When starting the unit, ensure you have a firm footing. Make sure the blade or the nylon string head does not touch the ground or any obstacle.

Fig. 2-5

5. **PRECAUTIONS AGAINST FIRE:**

Do not operate the brush cutter near fire or spilled petrol.

Do not run the engine in closed or poorly ventilated areas.

EXHAUST GASES ARE POISONOUS WHEN INHALED. THEY CAN CAUSE SUFFOCATION AND DEATH.

After refuelling, always wipe off any spilled fuel. Do not smoke during this operation. Start the engine far away from the refuelling area and from fuel containers (minimum distance 3 meters). Do not refuel while the engine is still running.

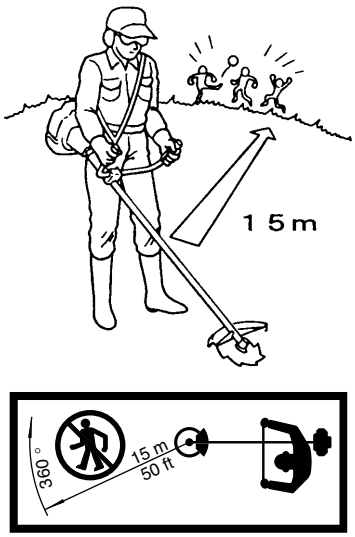

Fig. 2-6

6. Keep people and animals away from working area (minimum distance 15 meters). If somebody should approach you, turn the engine off and stop the blade (see section STARTING AND STOPPING THE ENGINE), as during operation the blade or the nylon string head might project grass, grit or other debris. The blade is sharp. Be careful even if handling it when the engine is off. Wear heavy-duty gloves. Turn the engine off and wait for rotating parts to stop completely before working on the machine or before touching the blade or the string head.

DO NOT USE THE BRUSH CUTTER AT ALL, IF THE SPECIFIED SAFETY GUARD IS NOT FIRMLY ATTACHED (see sections SAFETY USAGE and BLADES AND NYLON STRING HEAD ASSEMBLY).

Pay careful attention to any recommendations, as you might put your life or somebody else's in danger as a result of:

a) possible contact with cutting or rotating parts,

b) possibility of projection of various objects

WARNING: Do not start engine if it is not attached to the shaft, as the clutch might disintegrate.

[3] SAFETY USAGE

This product must be held to the right of the operator's body. This will exhaust fumes are directed away from the operator and will not be obstructed by the operator's clothing. If you have not used a brush cutter before, spend some time in becoming familiar with the controls and method of usage before operation. Check the machine carefully before using it. Make sure that there are no loosened screws, damaged parts or fuel leakages. Replace damaged or excessively worn accessories (blades, string heads, GUARDS).

Ensure all maintenance and repair work are carried out by an authorized service center. Check the condition of the antivibration components on a regular basis.

N.B. In order to maintain performance and safety, be sure to use original spare parts and accessories.

Avoid using the brush cutter over excessively long periods of time.

Excessive amounts of vibration can be harmful.

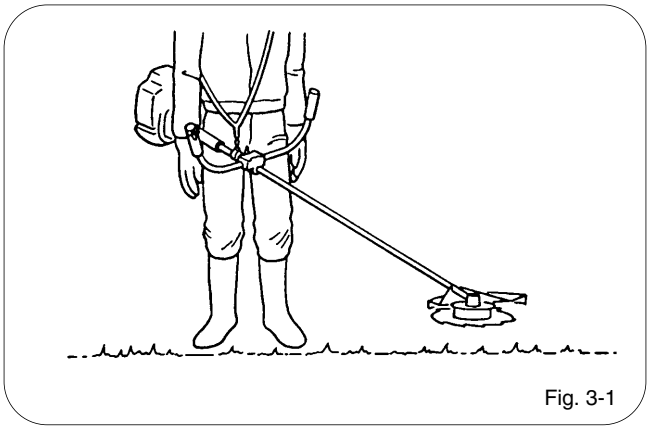

Fig. 3-1

1. Remove from the work area grit debris ropes, metal parts or any other object which might get entangled along the rotating parts or be dangerously projected. Before starting to work, fir the harness correctly. Adjust harness with the buckle so that the brush cutter is well blanced on your right side and the blade or string head is parallel to the ground.
   Ensure the pole barrier is correctly assembled (on units supplied with one).

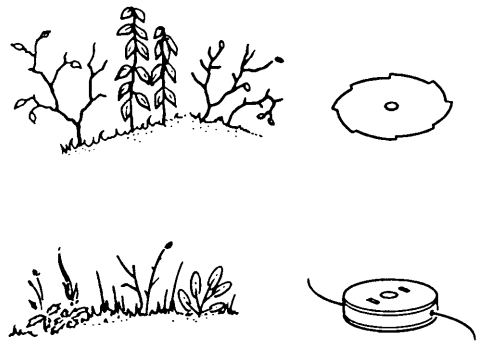

Fig. 3-2

2. The following accessories can be assembled to your brush cutter. a) blade, b) nylon string head.
   a) WHEN USING A BLADE, ENSURE THE CORRECT GUARD IS FITTED.
   b) WHEN USING A NYLON STRING HEAD, ENSURE THE CORRECT GUARD IS FITTED.

   When using the unit hold the front part of the machine (blade or nylon string head) below your waist.

NYLON STRING HEAD:

Always make sure it has been correctly assembled (see section ASSEMBLY and relevant chart).

The nylon string head is suitable to mow a lawn to trim grass and weeds on edges or wherever there might be obstacles like trees, fences or walls.

The nylon string head also reduces the likelihood of damaging small plants and trees bark.

BLADE:

Always make sure it has been correctly assembled (see section SAFETY and ASSEMBLY and relevant chart). When fitting or changing a cutting device, ensure you follow the instructions in the section "fitting a blade or nylon string head" with extreme precision. Fit these cutting devices using all and only the parts described, and in the correct order.

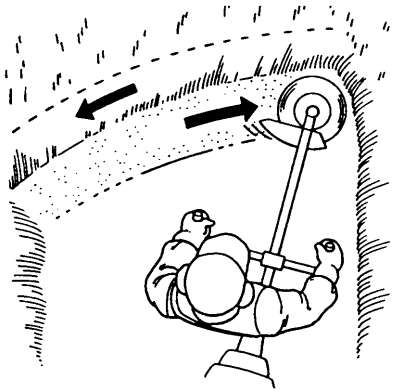

Fig. 3-3

3 **BLADES:**

You can cut any type of grass, bushwood or shrub. Operate the machine like a sickle always cutting at full throttle.

N.B. This machine is designed so that the blade or nylon string head is mounted for rotation in the anticlockwise direction.

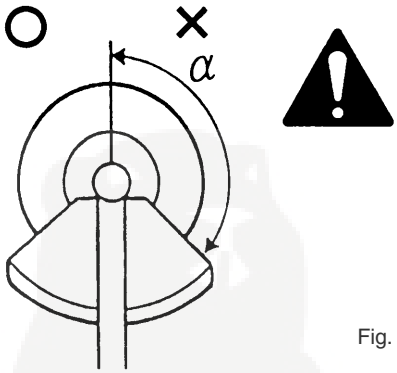

Fig. 3-4

4. **WARNING:** Always use a well sharpened blade. A blade with worn teeth besides providing poor performance, might also generate a sudden thrust. This can result in a violent sideways kick caused when the blade touches against solid bodies. Such thrust might then cause the operator to lose control of the machine itself. Do not attempt to use a damaged blade but replace it with a new one.

   THRUST: Can occur when using any type of blade within the risk area ⚠ ; therefore it is advisable to cut using the remaining area of the blade.

[4] FUEL MIX

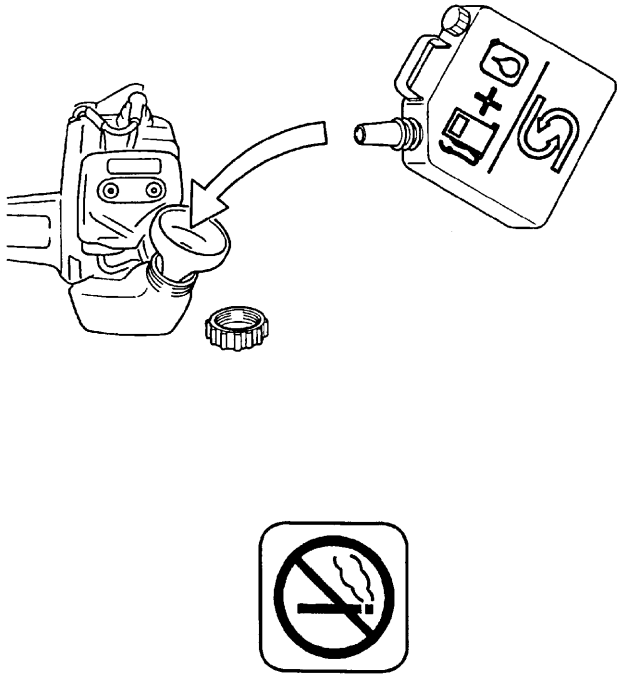

Fig. 4-1

	50 : 1 2 %
4 ltr	80 mL
5	100
10	200
20	400

This product is fitted with a 2-stroke engine and therefore requires a 2-stroke fuel and oil mix. Use a high quality 2-stroke engine oil using 2% (50:1) oil. In order to obtain a good fuel mix, put the oil into the container before the petrol.

Petrol

This engine can use leaded (4 star) or unleaded petrol with a minimum octane rating of 90. When using unleaded petrol mix it with 2% (50:1) of high quality synthetic oil specifically made for 2-stroke engines.

Important. Always shake this fuel mix vigorously each time you use it.

Fuel mix properties deteriorate with time. We therefore, recommend that you only make the quantity of fuel mix you will need for each usage. Do no use fuel mix more than a week old, as this could damage the engine.

Warning. Do not smoke when re-fuelling.

Always open the fuel cap slowly.

Re-fuel in open spaces only, keeping away from naked flames or sparks.

Always store fuel in an approved container.

Safety Storage of Fuel

Petrol is highly inflammable. Put out all cigarettes, pipes and cigars before working with petrol. Avoid spilling petrol. Store fuel in a cool well ventilated place, in an approved container specifically designed for the purpose. Never store engine with fuel in the tank in enclosed, poorly ventilated areas, where fuel fumes may reach an open flame, spark or pilot light such as in a furnace, water heater, clothes dryer, etc. Petrol fumes can cause an explosion or a fire. Do not store large amounts of fuel.

[5] SAFETY GUARD ASSEMBLY

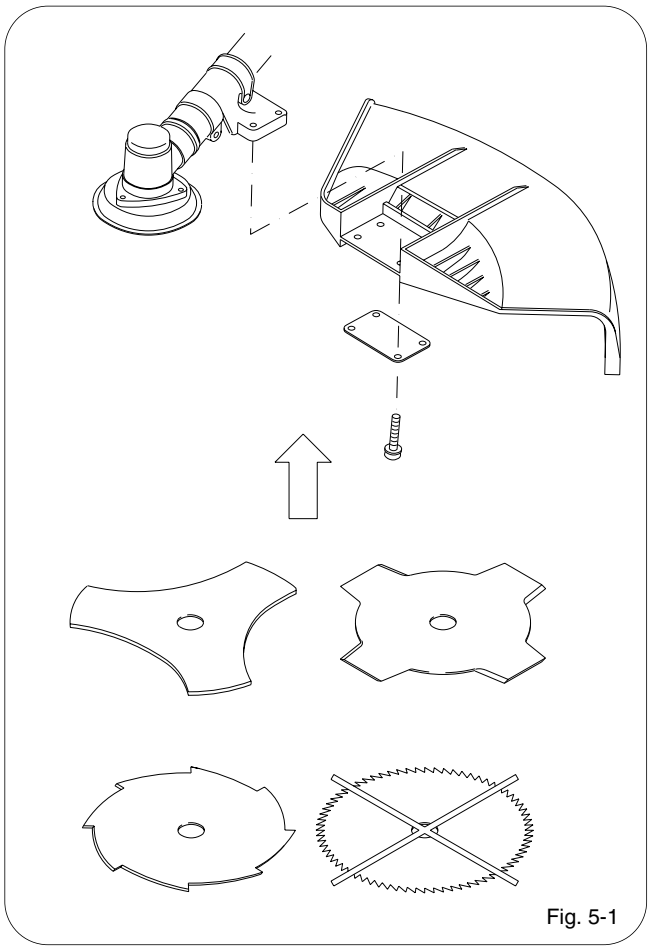

Fig. 5-1

1. For safety reasons, it is imperative that the unit is used with the correct guard when fitted with a grass cutting blade. (Fig. 5-1)

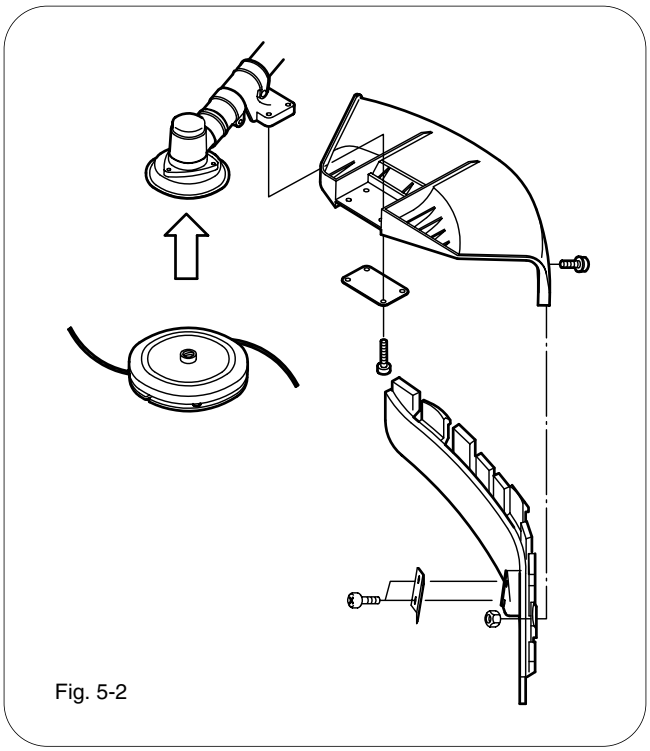

Fig. 5-2

2. For a safety reasons, it is imperative that the unit is used with the correct guard when fitted with a nylon head. (Fig. 5-2)
   Use only manufacturer's original blades. Only use blades or nylon string heads clearly marked with a maximum R.P.M. speed of at least 10,000 R.P.M.
   Follow the fitting instructions carefully

Our standard tightening torque of bolt, screw and nut is as follows:

Size	Torque (daN·m)
M4	1.6
M5	3.1
M6	5.1
M8	12.2
M10	24.5

Please be careful not to tighten them too tightly.

N.B. Bolt of grease-up port on gearcasing must be tightened at 3.6 daN·m torque.

[6] BLADE AND NYLON STRING HEAD ASSEMBLY

Assemble the correct guard to suit the kind of blade or nylon string head to be used (See section: SAFETY GUARD ASSEMBLY).

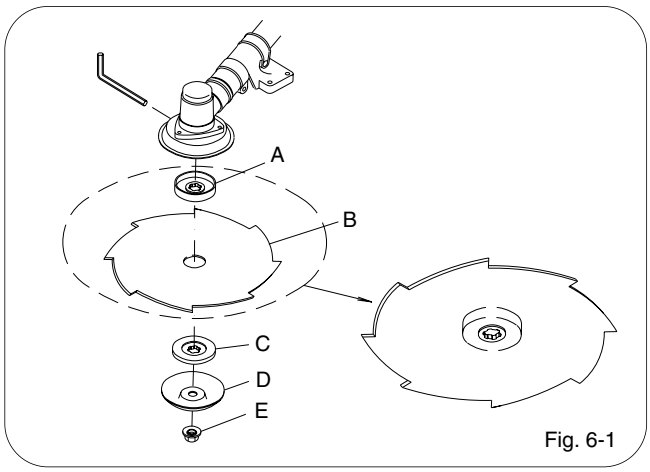

Fig. 6-1

1. Assemble the blade as illustrated.
   a) Holder cutter with blade centering
   b) Blade with text and directional arrow facing upwards
   c) Cap cutter
   d) Stabilizer
   e) Blade locking nut or bolt (Fig. 6-2)

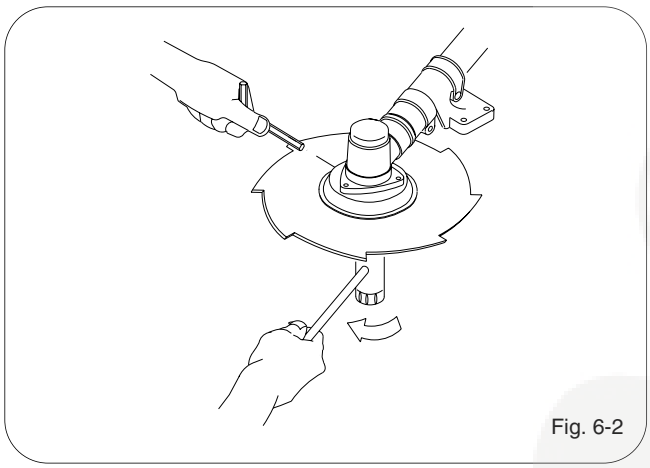
Fig. 6-2

2. Make sure that the blade core opening fits perfectly along the centering collar on the holder cutter. Tighten anticlockwise. While tightening, the blade assembly can be held fast by inserting the wrench or the screwdriver supplied into the holder cutter and gearcase holes. To do this, rotate the cap until the two holes coincide.

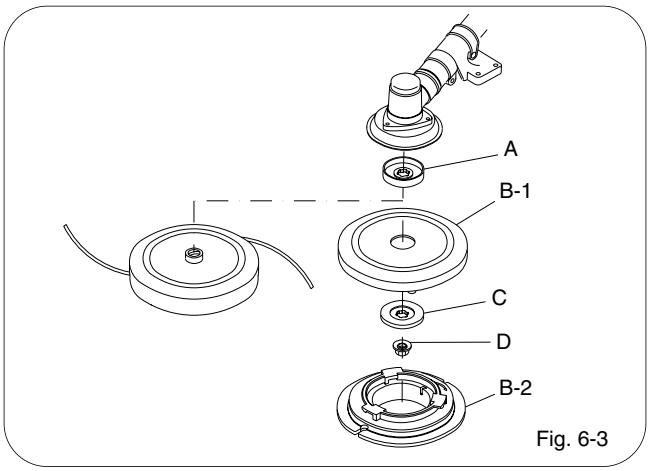

Fig. 6-3

3. Assemble nylon string head as illustrated.
   Model: NV
   a) Loosen the nylon string head NV, and leave Disc B-1 only.
   b) Match the Disc with the center of the holder cutter positionally.
   c) Cap cutter
      In the case of Model NV, the cap cutter C is a dedicated part.
   d) Blade locking nut or bolt (Fig. 6-2)
   e) Set the code cassette (B-2) on the Disc (B-1). For the handling method, refer to the manual for the nylon string head Model NV.

   Model: Spool cutter
   Mount the nylon string head after the cap cutter in succession. (Fig. 6-4)

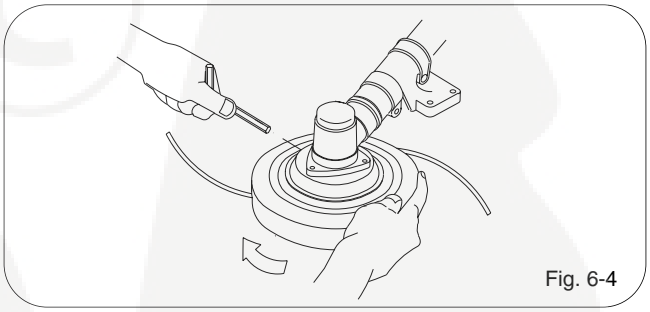
Fig. 6-4

4. While tightening, the head assembly can be held fast by inserting the wrench or the screwdriver supplied into the holes as already shown for the blade assembly.

[7] ENGINE/SHAFT HOUSING ASSEMBLY

⚠ DANGER

Do not run the engine without shaft housing attached, as the clutch could fly off.

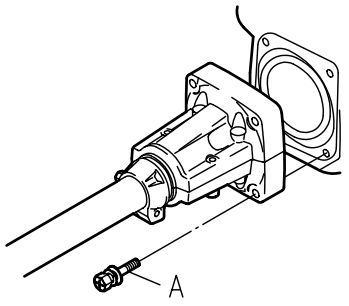

Fig. 7-1

1. Assemble the engine onto the shaft housing. Make sure the shaft is fully and correctly up to the shank, then tighten the four screws A. (Fig. 7-1)

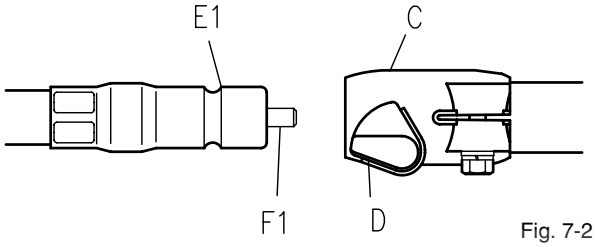

Fig. 7-2

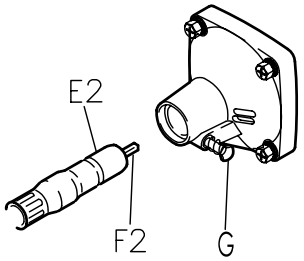

Fig. 7-3

2. In the case of a backpack type reaper, insert the flexible shaft ass'y metal fitting (E1) while pulling up the knob (D) of the flexible holder (C), then release your hand from the knob (D). Match the position of the flexible inner shaft end (F1) with the mating square hole, and push in the end from the E2 side. (Fig.7-2)
   Then, insert the flexible inner shaft ass'y metal fitting (E2) while pushing the knob (G).
   At that time, be careful so that the flexible inner shaft end (F2) enters the mating square hole. After the end (F2) enters the mating hole, release your hand from the knob (G). (Fig.7-3)

[8] HANDLE GRIP/HANDLE/THROTTLE WIRE ASSEMBLY

Mounting of handle grip

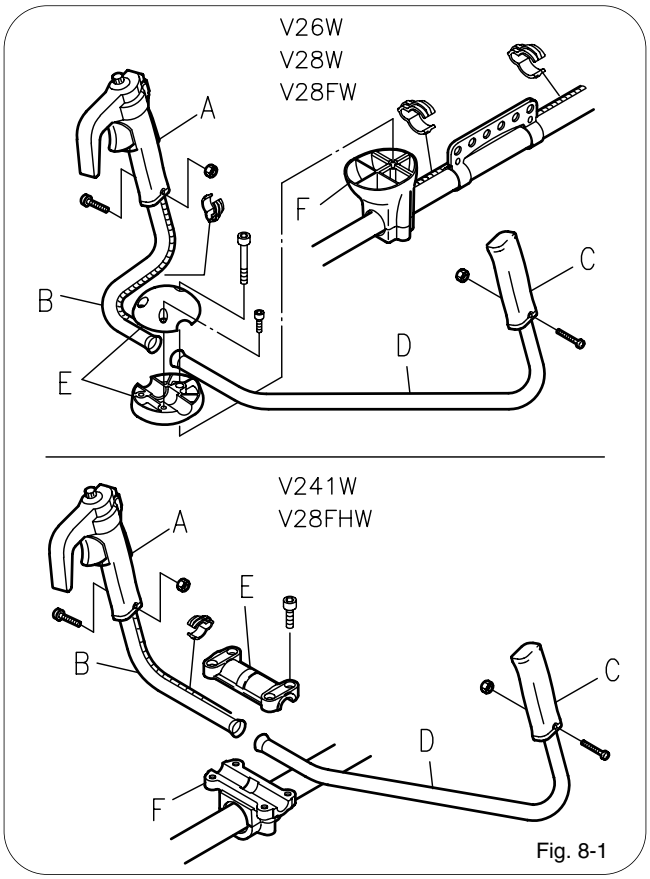

Fig. 8-1

1. **Double handle**
   Mount the control handle (A) on the handle (B) and the grip (C) on the handle (D). Engage individual handles with the grooves in the handle holder (F), hold them with the handle holder (E), and fix them with bolts. Fix the wire/cord Assy to the handle with a band. (Fig. 8-1)

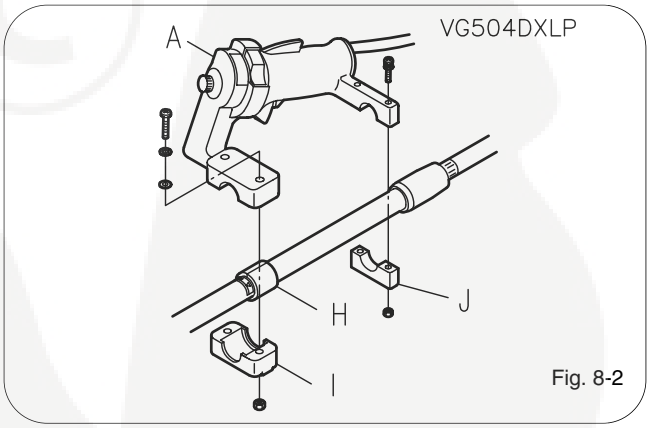

Fig. 8-2

2. **VG504DXLP**
   Wrap vibration proof rubber (H) around the drive shaft housing at the two marked positions.
   Place control handle (A) on the vibration proof rubber (H) toward the engine side, then attach and tighten handle holder (I) with bolts and nuts.

Attach and tighten handle holder (J) with bolts and nuts. (Fig.8-3)

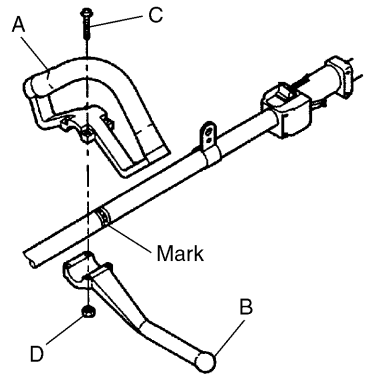

Fig. 8-3

3. **Loop handle**

The loop handle consists of loop handle body (A), handle holder (B), Setting bolts M5 × 30 (C) and nuts M5 (D).

Set the loop handle body at the marked position on the drive shaft housing, then attach and tighten handle holder (B) with bolts (C) and nuts (D).

Connection of throttle wire

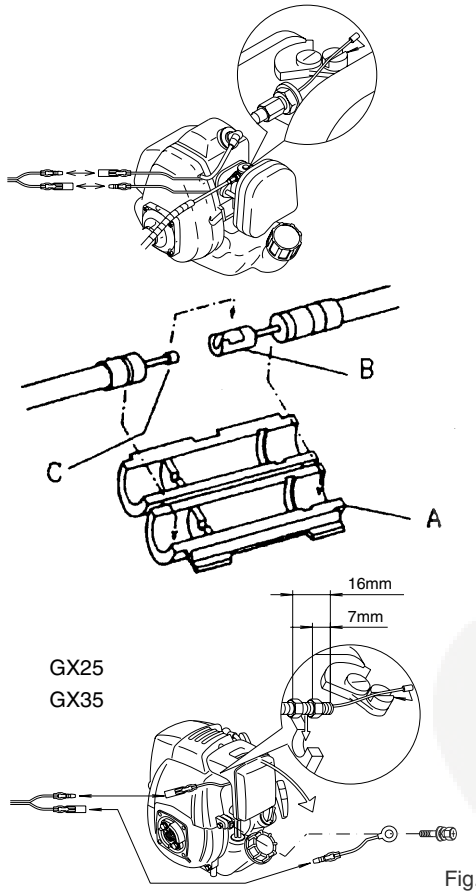

Fig. 8-4

Open the engine side throttle wire joint cover (A). Insert the control handle side wire end (C) in the engine side throttle wire end (B). Match the end with the joint cover groove positionally as it is, and close the joint cover. Connect the control handle/engine cord Assy. (Fig. 8-4)

[9] STARTING AND STOPPING THE ENGINE

MODEL: V24IW V26W V28W V28FW V28FHW VG504DXLP

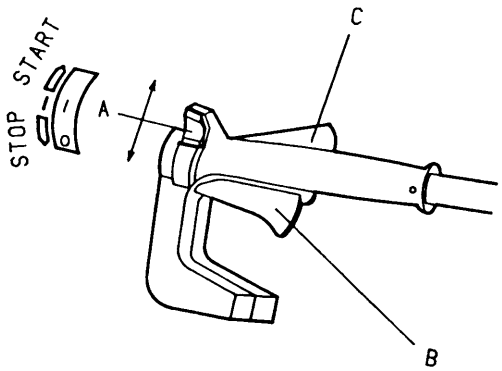

Fig. 9-1

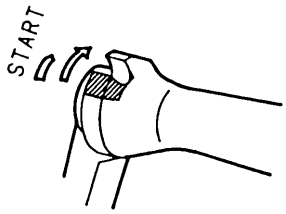

Fig. 9-2

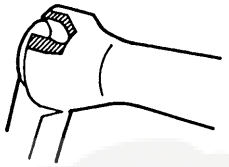
Fig. 9-3

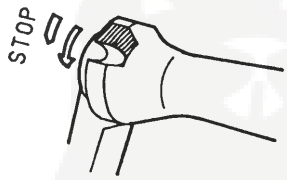

Fig. 9-4

ENGINE STARTING

First, press the safety lever (C), and fully hold the lever (B). Release your hand from the lever (B) in state with the knob (A) pushed in the "→ START" direction (Fig. 9-2). Then, the throttle is fixed in the middle speed position to facilitate easy start of the engine.

Start the engine in accordance with the engine operation manual. After start of the engine hold the lever (B) again, and leave your hand from it. Throttle advance is cancelled, and the engine is put in the idling state. At that time, the knob (A) moves to the position shown in Fig. 9-3.

ENGINE STOPPING

To stop the engine, push the knob (A) in the "← STOP" direction (Fig. 9-4).

WARNING: When the engine is switched off, the rotating part, blade or nylon string head, will keep on rotating for a few seconds. Hold the machine until all parts come to a standstill.

N.B. In an emergency the above mentioned delay in stopping may be shortened by touching the blade parallel to the grounds.

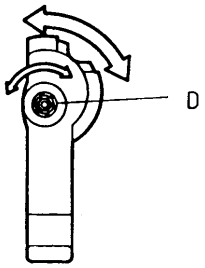

Fig. 9-5

The knob (D) on the control lever is a throttle positioner. (Fig. 9-5)

Turn the knob clockwise, and the engine rotational speed changes toward the lower speed side when the lever (B) is operated. The speed can be set to the higher side when the knob is turned anticlockwise. Select the knob position in conformance with the working condition.

N.B. If the knob is fastened excessively (clockwise), it becomes impracticable to lock the knob (A) in the "→ START" position.

MODEL: V241LPS V26LPS VG404DXLPS

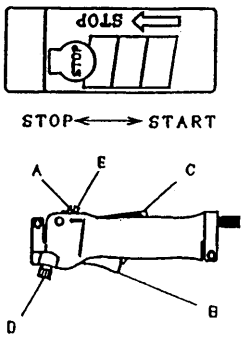

Fig. 9-6

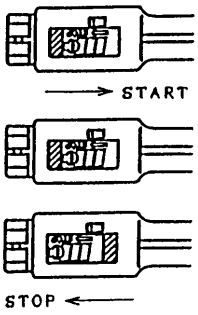

Fig. 9-7

Fig. 9-8

Fig. 9-9

ENGINE STARTING

Press lever (C) and hold lever (B). Release levers (C) and (B) while keeping knob (E) pressed. The throttle lever (B) is now in its partial acceleration position, in order to let the engine start more quickly and easily. Start the engine according to its operation and maintenance manual.

After starting the engine, pull throttle lever (B) once again and release it right away in order to unlock it from the partial acceleration position and to let the engine idle when lever (B) is released (Fig. 9-8).

ENGINE STOPPING

In order to stop the engine, press button (A) into its STOP position (Fig. 9-9).

WARNING: When the engine is switched off, the rotating part, blade or nylon string head, will keep on rotating for a few seconds. Hold the machine until all parts come to a standstill.

NOTE: In the event of an emergency, the time required for the disc or the string cutter head to stop can be reduced by resting the cutting tool level onto the ground. The ring nut (D) located on the control handle is for adjusting the engine.

By turning ring nut (D) clockwise, the engine rpm is reduced during the subsequent use of throttle lever (B). Conversely, turning ring nut (D) counterclockwise raises the engine rpm.

Therefore, adjust ring nut (D) according to the operating conditions.

[10] HARNESS HANDLING METHOD

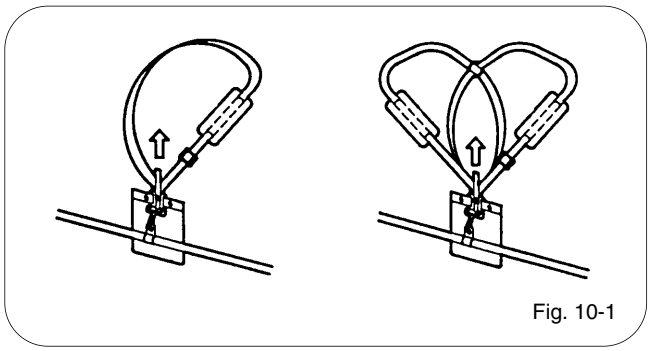

Fig. 10-1

In normal use of the reaper, set the harness side hook on the hanger strap stem securely before starting the work. This applies to both single and double harness. (Fig. 10-1)

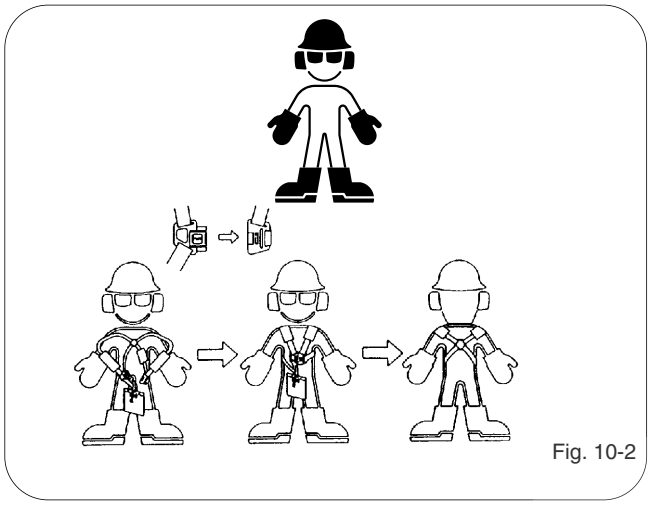

Fig. 10-2

For the harness fitting method, see Fig. 10-2.

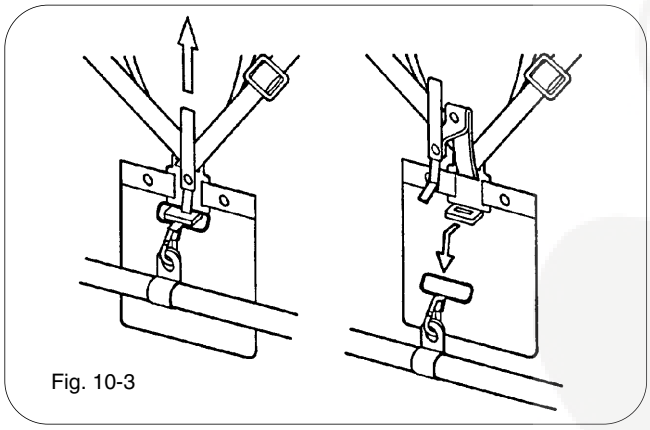

Fig. 10-3

In the case of an emergency pull up the belt (red), and the total machine can be separated from the harness. Be careful not to operate the belt carelessly except for a case of emergency. (Fig. 10-3)

[11] REGULAR MAINTENANCE

From time to time make sure all brush cutter screws are firmly secured. Replace damaged, worn, cracked or warped-blades. Always make sure nylon string head and blade have been assembled correctly (see section BLADE AND NYLON STRING HEAD ASSEMBLY) and blade fastener is tightened.

1. AIR FILTER CLEANING (at lease every 25 working hours). A dust clogged air filter may cause carburetor problems. This may prevent the engine from reaching its maximum r.p.m. and cause high fuel consumption and/or difficult starting. Remove filter cover. Carefully clean the inside of filter box. The filter can also be cleaned with compressed air.

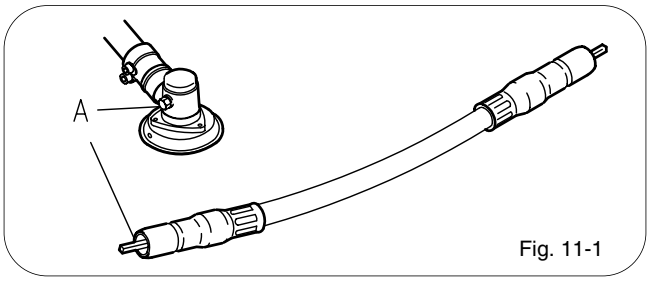

Fig. 11-1

2. Every 50 working hours inject the gearcase with gear grease under high pressure through hole A.
   In the case of a backpack type reaper;
   Apply grease to the flexible inner shaft ass'ys inner shaft as well.

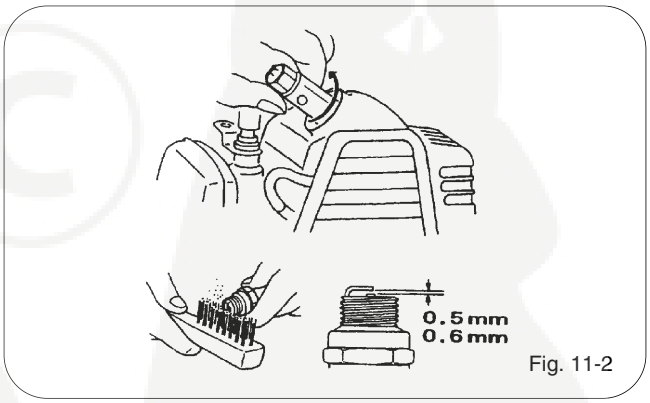

Fig. 11-2

3. SPARK PLUG
   From time to time (at least every 50 hours) remove and clean the spark plug and check the electrode cap (0.5/0.6 mm). Replace spark plug about every 100 working hours or whenever it is extremely encrusted. Heavily encrusted electrodes can result from an incorrect carburetor setting or from wrong fuel mixture (too much oil in the petrol) or a poor quality oil in the fuel mix. Check and correct.

[12] FAULT FINDING TABLE

	Engine will not start.	Engine will not start of run badly.	The brush cutter does not cut well.	Engine runs fast but loses power when cutting.
Check STOP switch is in the position I.	●	●		
Control fuel level min. 25% tank capacity.	●	●		
Check air filter is clean.		●		
Remove spark plug, dry it, clean it and adjust it, and replace it, if necessary..	●	●		
Control and adjust the carburetor screws if necessary.		●	●	●
Change fuel filter. Contact your dealer.				●
Carefully follow the blade assembly instructions.			●	
Check blade is sharp. Otherwise, contact you dealer.			●	

BRUSH CUTTER
DESBROZADORA
DEBROUSSAILLEUSE
ROÇADORAS
DECESPUGLIATORI
DRAAGBARE BOSMAAIER
TRAGBARE MOTORSENSE
MOTORLU TIRPAN

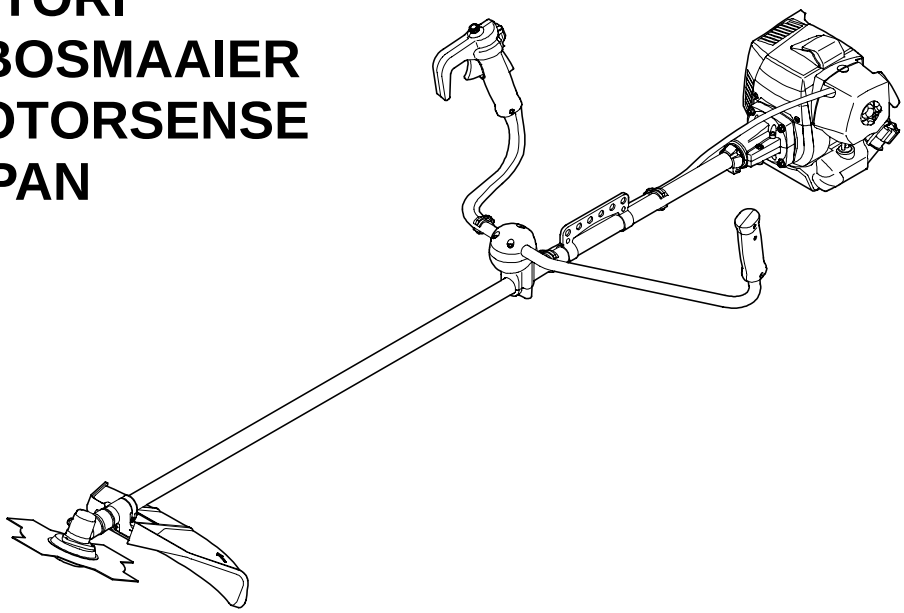

Model	**V242L**
Modelo	**V242W**
Modèle	**V262L**
Modelo	**V262W**
Modèllo	**V282W**
Model	
Model	
Model	

(ENGLISH) OPERATING MANUAL
(ESPAÑOL) MANUAL DE INSTRUCCIONES
(FRANÇAIS) MANUAL DE FONCTIONNEMENT
(PORTUGUÊS) MANUAL DE INSTRUÇÕES
(ITALIANO) MANUALE D'USO E MANUTENZIONE
(NEDERLANDS) HANDLEIDING
(DEUTSCH) BEDIENUNGSANLEITUNG
(TÜRKÇE) KULLANMA KILAVUZU

Make sure all operators study this Manual carefully before using the brush cutter.

MARUNAKA ,LTD.
11MUKAIDANISHI-MACHI.KISSHOIN.MINAMI-KU.KYOTO,JAPAN.601-8307
info-e@marunaka-japan.co.jp
http://www.marunaka-japan.co.jp

CODE: 800204407
0802

Contents

ENGLISH

TECHNICAL DATA

Model			V242L			V242W			V262L				V262W				V282W
Engine			TJ027E	GX25	TLE26	TJ027E	GX25	TLE26	TJ035E	TJ045E	GX35	TLE33	TJ035E	TJ045E	GX35	TLE33	TJ045E
Masses	Unit without cutting attachment, empty tank	kg	5.4	5.9	5.6	6.1	6.6	6.3	6.5	7.3	7.2	6.9	7.5	8.4	8.4	7.9	8.6
	Unit with specified cutting attachment, empty tank	kg	6.0	6.5	6.2	6.7	7.2	6.9	7.2	8.0	7.9	7.6	8.2	9.0	8.9	8.6	9.2
	Unit with specified cutting attachment, full tank	kg	6.4	6.9	6.7	7.1	7.6	7.4	7.7	8.6	8.4	8.2	8.7	9.6	9.4	9.2	9.8
Volume	Fuel tank	l	0.5	0.58	0.6	0.5	0.58	0.6	0.7	0.9	0.63	0.8	0.7	0.9	0.63	0.8	0.9
Cutting attachment	Specified blade diameter	mm	230						255								
	Specified blade thickness	mm	1.4														
	Number of cutting teeth		3 , 4 or 8														
	Blade center hole diameter	mm	25.4														
	Blade rotational speed at maximum allowed engine speed	rpm	8000														
Gear ratio			1.36														
Rotational direction of output shaft			Seen from above anticlockwis														
External dimensions	Length	mm	1835	1865	1845	1835	1865	1845	1850	1860	1875	1845	1850	1860	1875	1845	1860
	Width	mm	400	400	400	695	695	695	400	400	400	400	690	690	690	690	690
	Height	mm	295	310	300	480	480	480	325	335	340	330	525	525	525	525	525
Engine displacement		cm^3	26.3	25.0	25.6	26.3	25.0	25.6	34.4	45.4	35.8	32.6	34.4	45.4	35.8	32.6	45.4
Maximum shaft brake power,measured in accordance with ISO 8893		kW	0.77	0.72	1.12	0.77	0.72	1.12	1.03	1.4	1.0	1.3	1.03	1.4	1.0	1.3	1.4
Rotational speeds	Engine speed at maximum power	rpm	7500	7000	7500	7500	7000	7500	7000	7500	7000	7000	7000	7500	7000	7000	7500
	Recommended maximum engine speed	rpm	8000	8000	8000	8000	8000	8000	8000	8000	8000	8000	8000	8000	8000	8000	8000
	Output shaft speed	rpm	5900	5900	5900	5900	5900	5900	5900	5900	5900	5900	5900	5900	5900	5900	5900
	Recommended engine idling speed	rpm	2800	2800	2800	2800	2800	2800	2800	2800	2800	2800	2800	2800	2800	2800	2800
	Engine speed at beginning of clutch engagement	rpm	3800	3800	3800	3800	3800	3800	3800	3800	3800	3800	3800	3800	3800	3800	3800
Fuel consumption		gr/(kW·h)	545/7500rpm	547/7000rpm	387/7500rpm	545/7500rpm	547/7000rpm	387/7500rpm	465/7000rpm	460/7500rpm	518/7000rpm	445/7000rpm	465/7000rpm	460/7500rpm	518/7000rpm	445/7000rpm	460/7500rpm
Sound pressure levels	Idling (L_{PI})	dB	75.9	72.6	76.7	75.9	72.6	76.7	77.2	74.0	72.5	75.2	77.2	74.0	72.5	75.2	74.0
	Racing (L_{PR})	dB	96.3	94.1	96.2	96.3	94.1	96.2	98.5	101.2	96.0	97.6	98.5	101.2	96.0	97.6	101.2
Sound power levels	Idling (L_{WI})	dB	87	83	88	87	83	88	87	84	86	87	87	84	86	87	84
	Racing (L_{WR})	dB	106	106	108	106	106	108	110	110	109	110	110	110	109	110	110
Guaranteed sound power level (L_{WA})		dB	109			109			111				111				111
Vibration levels	Idling (R／L)	m/s^2	2.2／4.4	1.8／2.4	2.5／5.5	2.3／2.2	1.6／1.5	2.2／2.1	4.3／5.3	3.0／5.1	1.3／3.4	5.0／4.6	2.7／4.0	3.4／2.7	1.7／3.0	1.9／2.9	2.6／1.9
	Racing (R／L)	m/s^2	6.2／12.2	7.5／7.7	6.7／10.9	3.1／2.5	4.8／4.2	5.1／4.4	6.5／8.8	7.1／8.3	7.4／7.2	4.9／11.1	5.6／5.0	7.9／7.1	5.6／4.8	6.3／6.0	7.1／5.1
	Equivalent vibration total values (R／L)	m/s^2	4.6／9.2	5.4／5.7	5.1／8.6	2.7／2.3	3.5／3.2	3.9／3.4	5.5／7.2	5.4／6.9	5.3／5.7	4.9／8.5	4.4／4.5	6.1／5.4	4.1／4.0	4.7／4.7	5.4／3.9

SYMBOL MEANING

	Warning-Caution
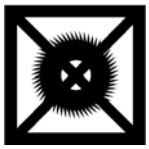	Do not use saw-blade
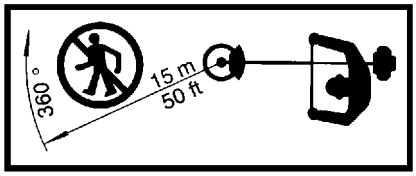	Minimum safety distance
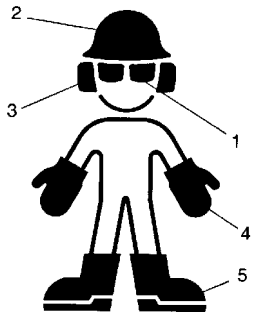	Safety clothing: 1) Approved safety glasses of face shield 2) Approved safety helmet 3) Approved ear defender 4) Approved gloves 5) Approved safety footwear
	Read operating manual carefully
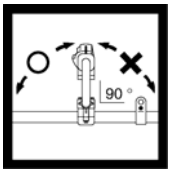	Single handle should be locked in place marked ‘○’
	Do not smoke while refuelling or while operating the machine
	Beware of thrown objects

[1] GENERAL DESCRIPTION

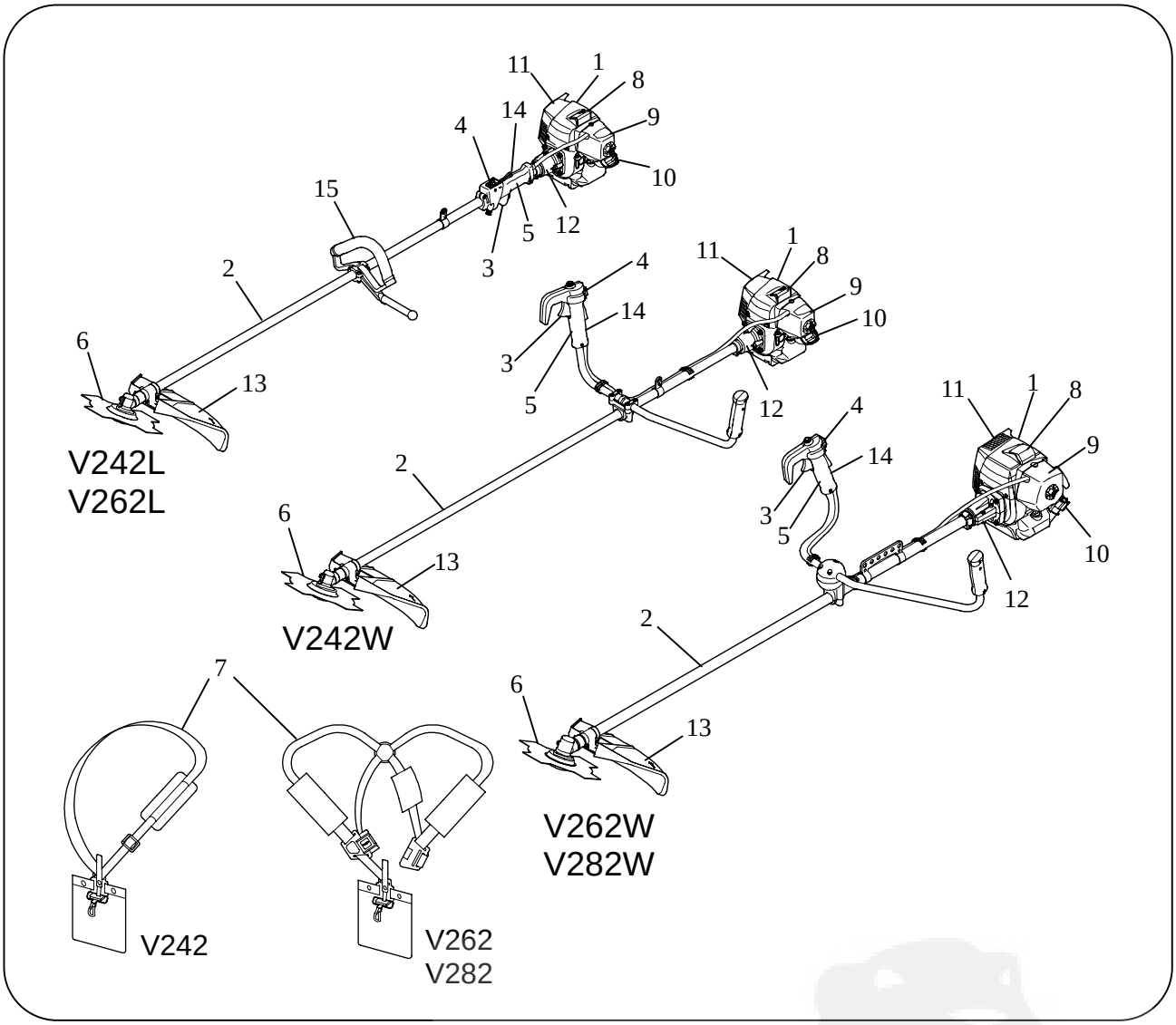

1. Engine
2. Drive shaft housing
3. Trigger
4. STOP switch/throttle advance
5. Control handle
6. Blade
7. Harness
8. Spark plug
9. Air cleaner cover
10. Fuel tank cap
11. Muffler
12. Clutch case
13. Safety guard
14. Safety grip
15. Loop handle

[2] SAFETY RULES

Fig.2-1

1. Make sure all operators study this manual carefully before using the brush cutter. Do not allow children to use the brush cutter.

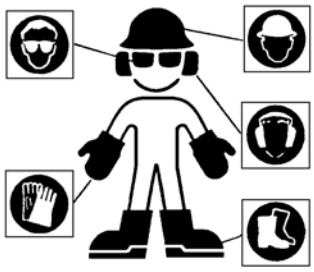

Fig.2-2

2. When working with the brush cutter, wear suitable clothes.
   a) Close fitting protective clothes (do not wear short trousers or loose clothes)
   b) Safety shoes (do not wear sandals and do not work barefoot)
   c) Heavy-duty gloves
   d) Safety face shield or goggles
   e) Ear protection

   Make sure you know how to stop the engine and the blade in an emergency (see section STARTING AND STOPPING ENGINE). Never use the brush cutter when tired, physically indisposed or under the effect of alcohol, certain medicines or other drugs.

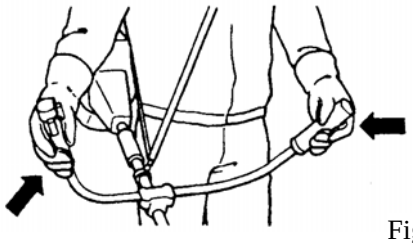

Fig.2-3

3. Be careful. Prolonged usage of this product may expose the operator to vibration which can produce Whitefinger disease (Raynand's Phenomenon).

   Always hold the brush cutter firmly with both hands. When working, maintain a firm foothold. The brush cutter must be used exclusively as recommended (see section SAFETY USAGE).

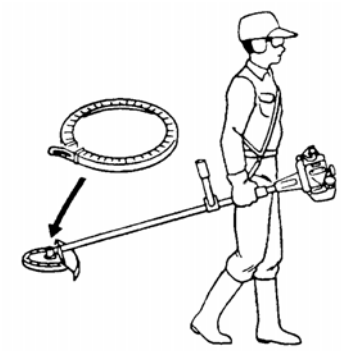

Fig.2-4

4. Do not carry the brush cutter while the engine is running even for short distances; switch off the engine put the blade cover on the blade and carry the unit with the cutting head behind you. When carrying the brush cutter in a vehicle, secure it to prevent it from moving around. Always empty the fuel tank before transporting the unit. Start the brush cutter on a flat surface. When starting the unit, ensure you have a firm footing. Make sure the blade or the nylon string head does not touch the ground or any obstacle.

Fig.2-5

5. Do not operate the brush cutter near fire or spilled petrol. Do not run the engine in closed or poorly ventilated areas. EXHAUST GASES ARE POISONOUS WHEN INHALED. THEY CAN CAUSE SUFFOCATION AND DEATH.

   After refuelling, always wipe off any spilled fuel. Do not smoke during this operation. Start the engine far away from the refuelling area and from fuel containers (minimum distance 3 meters). Do not refuel while the engine is still running.

Fig.2-6

6. Keep people and animals away from working area (minimum distance 15 meters).
   If somebody should approach you, turn the engine off and stop the blade (see section STARTING AND STOPPING THE ENGINE), as during operation the blade or the nylon string head might project grass, grit or other debris. The blade is sharp. Be careful even if handling it when the engine is off. Wear heavy-duty gloves. Turn the engine off and wait for rotating parts to stop completely before working on the machine or before touching the blade or the string head.
   DO NOT USE THE BRUSH CUTTER AT ALL, IF THE SPECIFIED SAFETY GUARD IS NOT FIRMLY ATTACHED (see sections SAFETY USAGE and BLADES AND NYLON STRING HEAD ASSEMBLY).
   Pay careful attention to any recommendations, as you might put your life or somebody else's in danger as a result of:
   a) possible contact with cutting or rotating parts,
   b) possibility of projection of various objects

   WARNING: Do not start engine if it is not attached to the shaft, as the clutch might disintegrate.

[3] SAFETY USAGE

This product must be held to the right of the operator's body. This will exhaust fumes are directed away from the operator and will not be obstructed by the operator's clothing. If you have not used a brush cutter before, spend some time in becoming familiar with the controls and method of usage before operation. Check the machine carefully before using it. Make sure that there are no loosened screws, damaged parts or fuel leakages. Replace damaged or excessively worn accessories (blades, string heads, GUARDS).
Ensure all maintenance and repair work are carried out by an authorized service center. Check the condition of the antivibration components on a regular basis.

N.B. In order to maintain performance and safety, be sure to use original spare parts and accessories. Avoid using the brush cutter over excessively long periods of time.
Excessive amounts of vibration can be harmful.

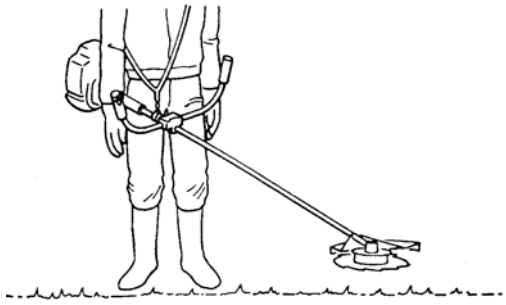
Fig.3-1

1. Remove from the work area grit debris ropes, metal parts or any other object which might get entangled along the rotating parts or be dangerously projected. Before starting to work, fir the harness correctly. Adjust harness with the buckle so that the brush cutter is well blanced on your right side and the blade or string head is parallel to the ground.
   Ensure the pole barrier is correctly assembled (on units supplied with one).

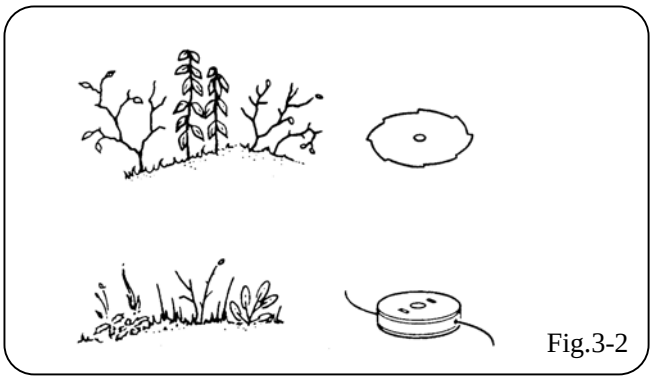

Fig.3-2

2. The following accessories can be assembled to your brush cutter. a) blade, b) nylon string head.
   a)WHEN USING A BLADE, ENSURE THE CORRECT GUARD IS FITTED.
   b)WHEN USING A NYLON STRING HEAD,ENSURE THE CORRECT GUARD IS FITTED.
   When using the unit hold the front part of the machine (blade or nylon string head) below your waist.

NYLON STRING HEAD:

Always make sure it has been correctly assembled (see section ASSEMBLY and relevant chart).
The nylon string head is suitable to mow a lawn to trim grass and weeds on edges or wherever there might be obstacles like trees, fences or walls.
The nylon string head also reduces the likelihood of damaging small plants and trees bark.

BLADE:

Always make sure it has been correctly assembled (see section SAFETY and ASSEMBLY and relevant chart).
When fitting or changing a cutting device, ensure you follow the instructions in the section “fitting a blade or nylon string head” with extreme precision. Fit these cutting devices using all and only the parts described, and in the correct order.

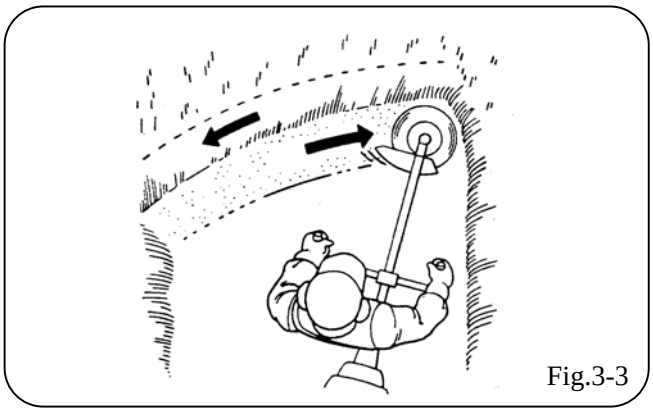

Fig.3-3

3 .**BLADES:**

You can cut any type of grass, bushwood or shrub. Operate the machine like a sickle always cutting at full throttle.
N.B. This machine is designed so that the blade or nylon string head is mounted for rotation in the anticlockwise direction.

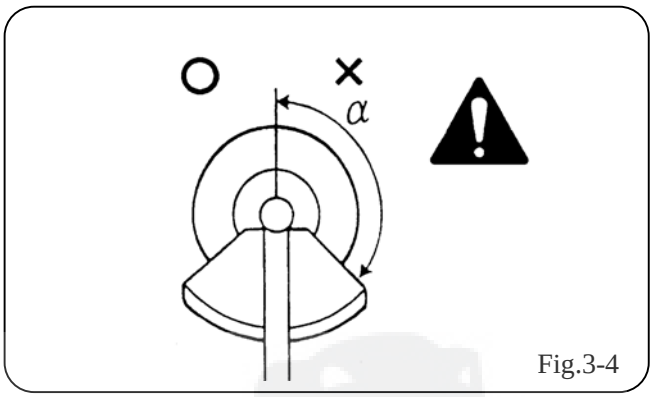

Fig.3-4

4. **WARNING:** Always use a well sharpened blade.
   A blade with worn teeth besides providing poor performance, might also generate a sudden thrust. This can result in a violent sideways kick caused when the blade touches against solid bodies. Such thrust might then cause the operator to lose control of the machine itself. Do not attempt to use a damaged blade but replace it with a new one.
   THRUST: Can occur when using any type of blade within the risk area ⚠ ; therefore it is advisable to cut using the remaining area of the blade.

[4] FUEL AND OIL

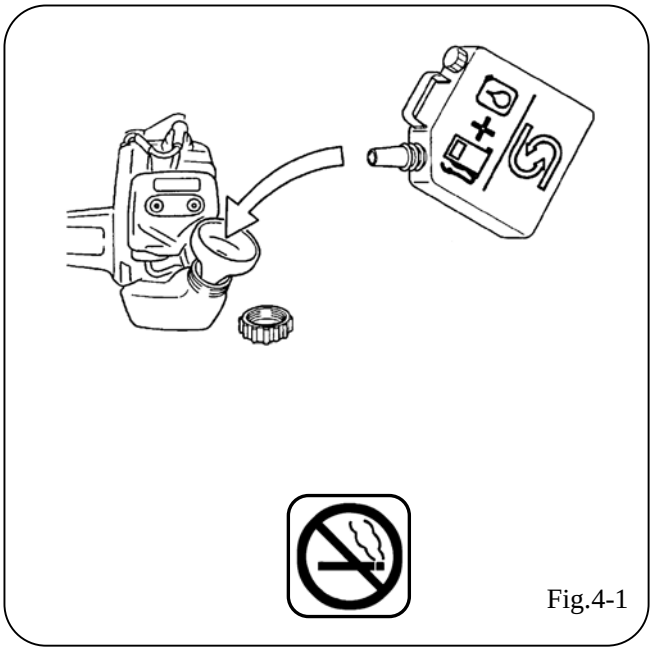

Fig.4-1

	50 : 1 2 %
4 ltr	80 mL
5	100
10	200
20	400

1. **2-STROKE ENGINE**
   (KAWASAKI:TJ Series , MITSUBISHI:TLE Series)
   This product is fitted with a 2-stroke engine and therefore requires a 2-stroke fuel and oil mix. Use a high quality 2-stroke engine oil using 2% (50:1) oil. In order to obtain a good fuel mix, put the oil into the container before the petrol.

   Petrol
   This engine can use leaded (4 star) or unleaded petrol with a minimum octane rating of 90. When using unleaded petrol mix it with 2% (50:1) of high quality synthetic oil specifically made for 2-stroke engines.
   IMPORTANT: Always shake this fuel mix vigorously each time you use it.
   Fuel mix properties deteriorate with time. We therefore, recommend that you only make the quantity of fuel mix you will need for each usage. Do no use fuel mix more than a week old, as this could damage the engine.
   WARNING: Do not smoke when re-fuelling.
   Always open the fuel cap slowly.
   Re-fuel in open spaces only, keeping away from naked flames or sparks.
   Always store fuel in an approved container.

   Safety storage of fuel

   Petrol is highly inflammable. Put out all cigarettes, pipes and cigars before working with petrol. Avoid spilling petrol. Store fuel in a cool well ventilated place, in an approved container specifically designed for the purpose. Never store engine with fuel in the tank in enclosed, poorly ventilated areas, where fuel fumes may reach an open flame, spark or pilot light such as in a furnace, water heater, clothes dryer, etc. Petrol fumes can cause an explosion or a fire. Do not store large amounts of fuel.

2. **4-STROKE ENGINE (HONDA: GX Series)**
   Petrol
   This engine can use leaded (4 star) or unleaded petrol with a minimum octane rating of 90.

   CAUTION: Be sure to stop the engine before checking the engine oil level. Do not restart the engine until you have finished checking the oil.

[5] SAFETY GUARD ASSEMBLY

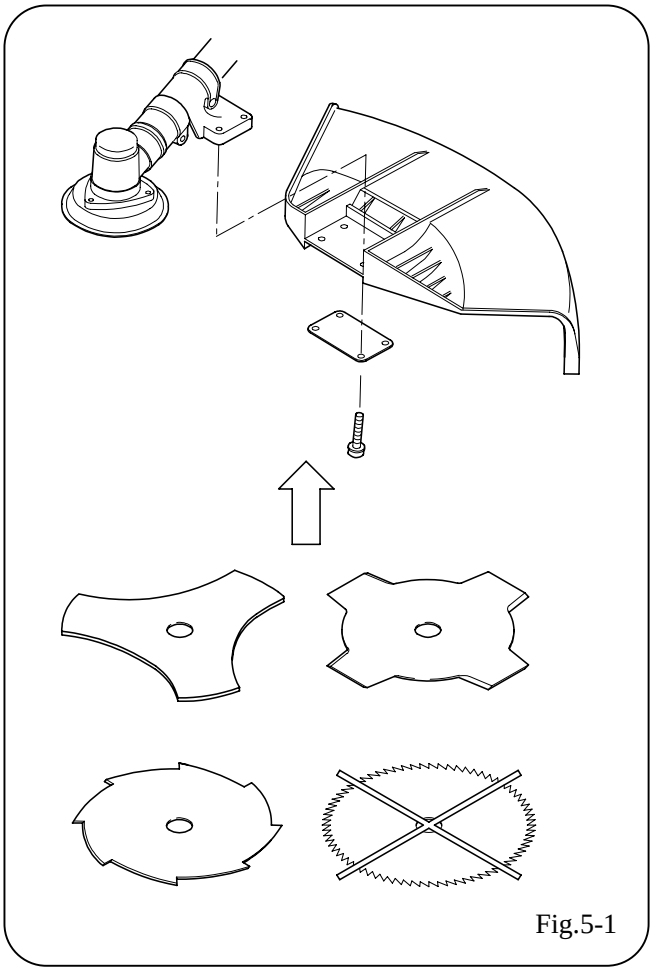

Fig.5-1

1. For safety reasons, it is imperative that the unit is used with the correct guard when fitted with a grass cutting blade. (Fig. 5-1)

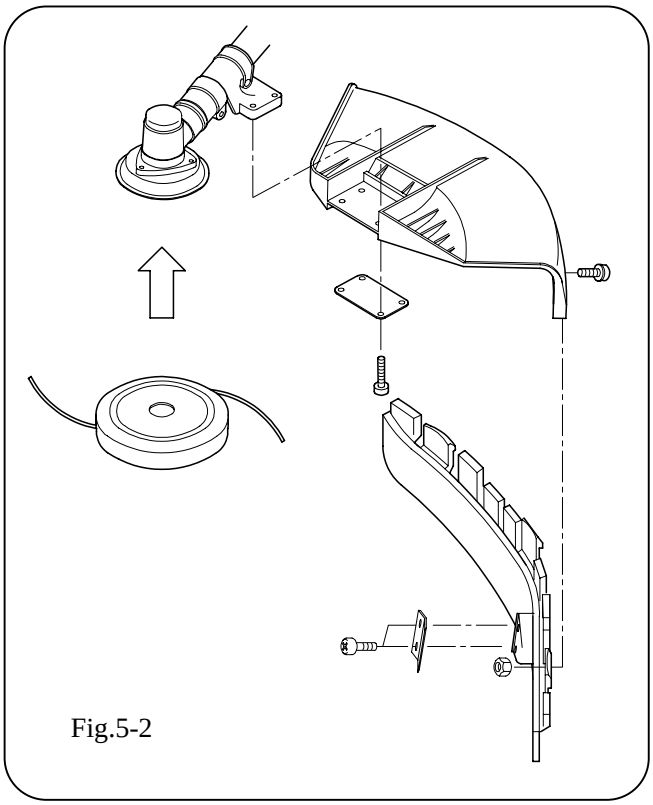

Fig.5-2

2. For a safety reasons, it is imperative that the unit is used with the correct guard when fitted with a nylon head. (Fig. 5-2)

Use only manufacturer's original blades.
Only use blades or nylon string heads clearly marked with a maximum R.P.M. speed of at least 10,000 R.P.M.
Follow the fitting instructions carefully

Our standard tightening torque of bolt, screw and nut is as follows:

Size	Torque (daN·m)
M4	1.6
M5	3.1
M6	5.1
M8	12.2
M10	24.5

Please be careful not to tighten them too tightly.

N.B. Bolt of grease-up port on gearcasing must be tightened at 3.6 daN·m torque.

[6] BLADE AND NYLON STRING HEAD ASSEMBLY

Assemble the correct guard to suit the kind of blade or nylon string head to be used (See section: SAFETY GUARD ASSEMBLY).

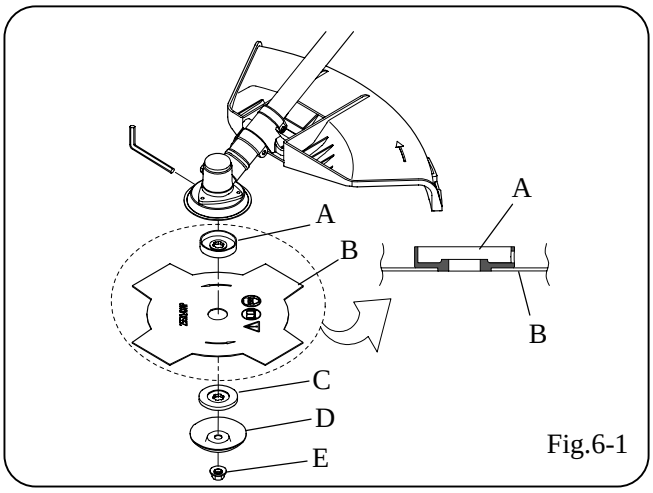

Fig.6-1

1. Assemble the blade as illustrated.
   a) Holder cutter (A) with blade (B) centering
   b) Blade (B) with text and directional arrow facing upwards
   c) Cap cutter (C)
   d) Stabilizer (D)
   e) Blade locking nut (E) (Fig. 6-2)

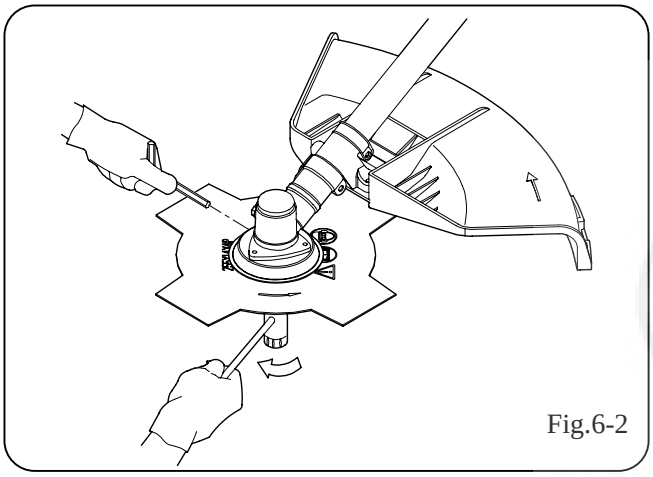
Fig.6-2

2. Make sure that the blade core opening fits perfectly along the centering collar on the holder cutter. Tighten anticlockwise. While tightening, the blade assembly can be held fast by inserting the wrench or the screwdriver supplied into the holder cutter and gearcase holes. To do this, rotate the cap until the two holes coincide.

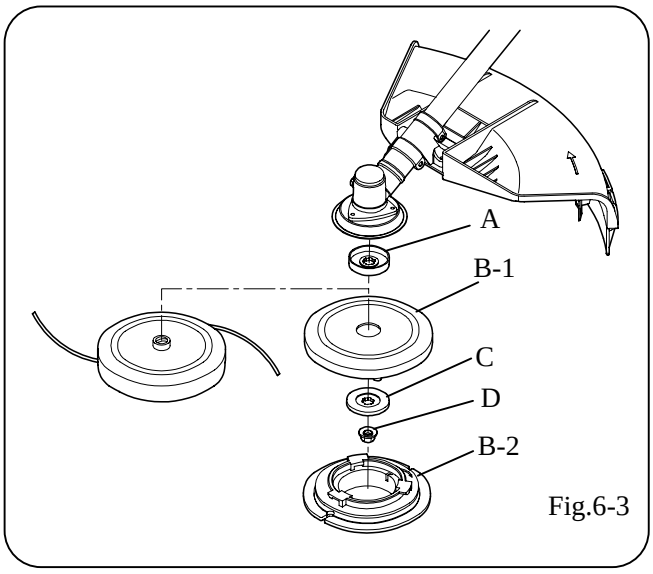

Fig.6-3

3. Assemble nylon string head as illustrated.
   Model: NV
   a) Loosen the nylon string head NV, and leave Disc (B-1) only.
   b) Match the Disc with the center of the holder cutter positionally.
   c) Cap cutter
      In the case of Model NV, the cap cutter (C) is a dedicated part.
   d) Blade locking nut (D) (Fig. 6-2)
   e) Set the code cassette (B-2) on the Disc (B-1). For the handling method, refer to the manual for the nylon string head Model NV.

   Model: Spool cutter
   Mount the nylon string head after the cap cutter in succession. (Fig. 6-4)

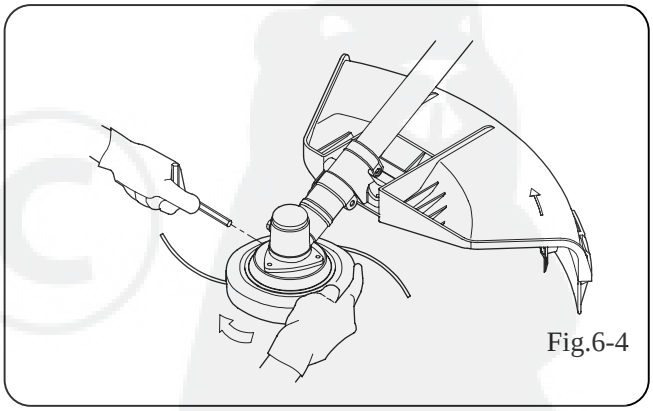
Fig.6-4

4. While tightening, the head assembly can be held fast by inserting the wrench or the screwdriver supplied into the holes as already shown for the blade assembly.

[7] ENGINE/ CLUTCH CASE ASSEMBLY

⚠ DENGER

Do not run the engine without clutch case attached, as the clutch could fly off.

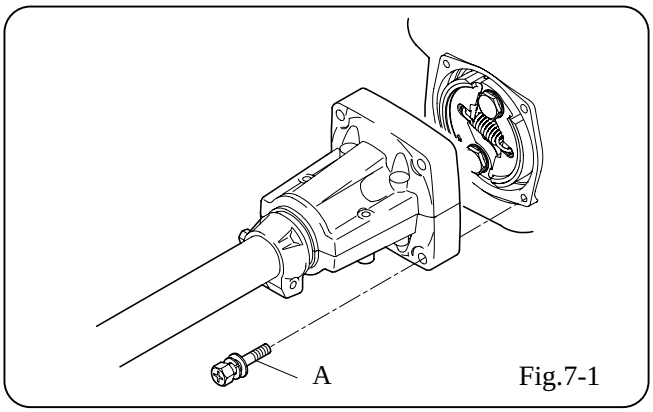

Fig.7-1

1. Assemble the engine onto the clutch case. Make sure the shaft is fully and correctly up to the shank, then tighten the four screws A. (Fig. 7-1)

[8] HANDLE GRIP/HANDLE/THROTTLE WIRE ASSEMBLY

Mounting of handle grip

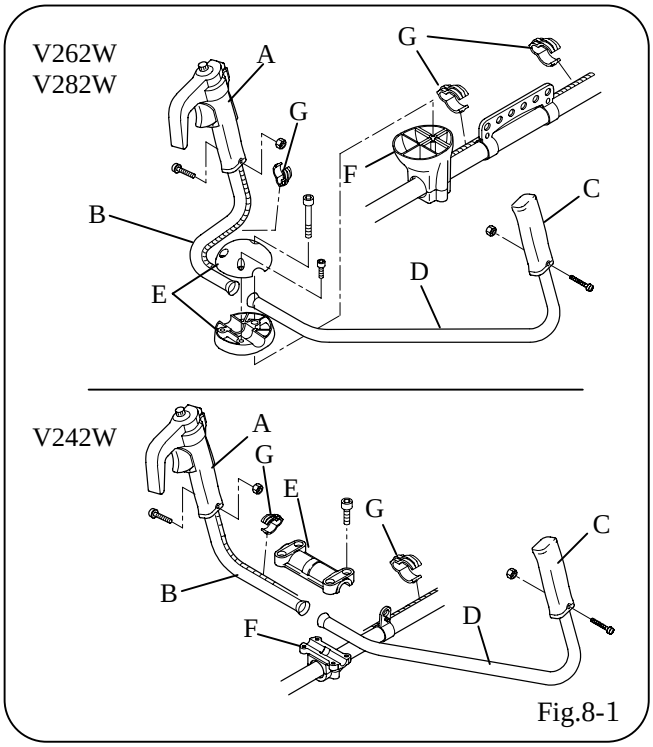

Fig.8-1

1. **Double handle**
   Mount the control handle (A) on the handle (B) and the grip (C) on the handle (D). Engage individual handles with the grooves in the handle holder (F), hold them with the handle holder (E), and fix them with bolts. Fix the wire/cord Assy to the handle with a band (G). (Fig. 8-1)

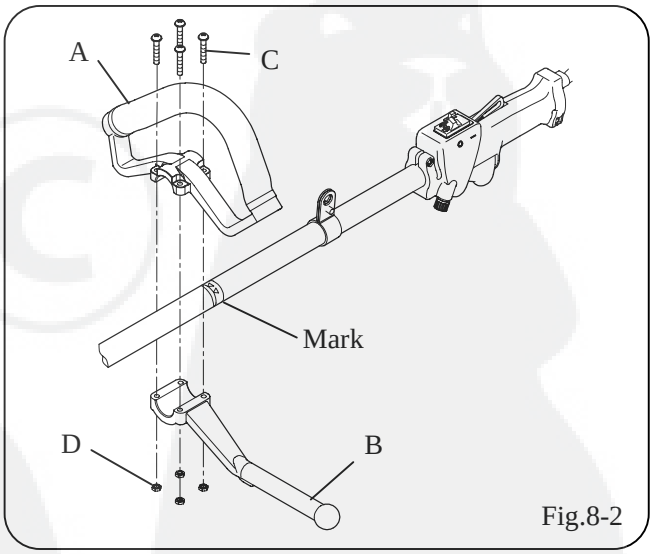

Fig.8-2

2. **Loop handle**
   The loop handle consists of the loop handle body (A), the handle holder (B), setting bolts M5×30 (C) and nuts M5 (D).
   Set the loop handle body at the marked position on the drive shaft housing, then attach and tighten the handle holder (B) with the bolts (C) and nuts (D).

Connection of throttle wire

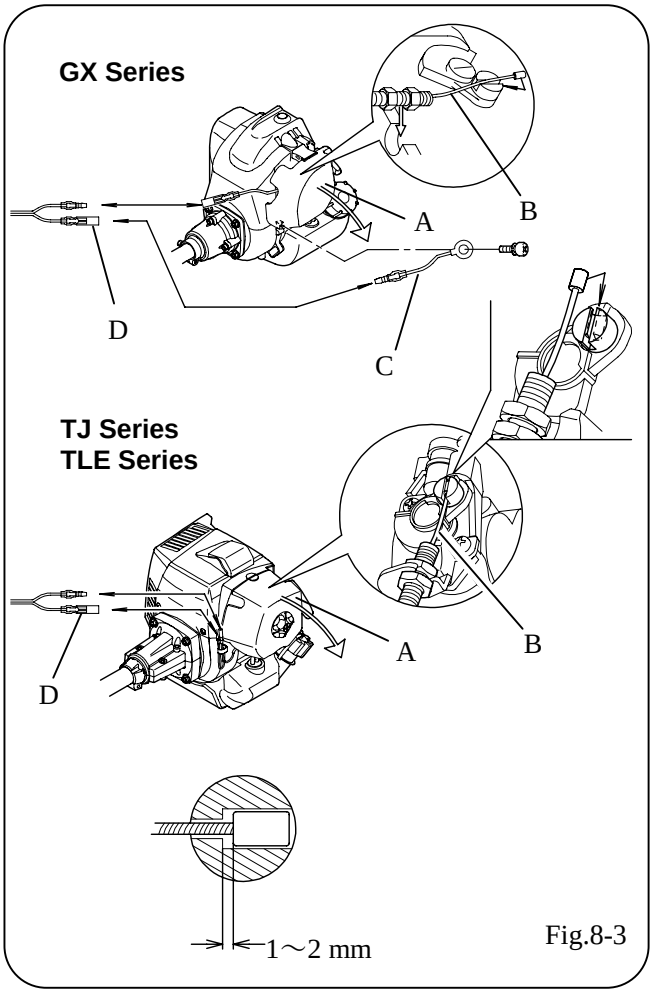

Fig.8-3

Remove the air cleaner cover (A).
Attach the throttle wire (B). The normal play is 1 or 2 mm when measured at the throttle wire end.
Attach the engine cord (C) to the engine (GX Series only).
Attach the cord from the control handle (D) to the engine cord.
Install the air cleaner (A).

[9] STARTING AND STOPPING THE ENGINE

MODEL: V242W V262W V282W

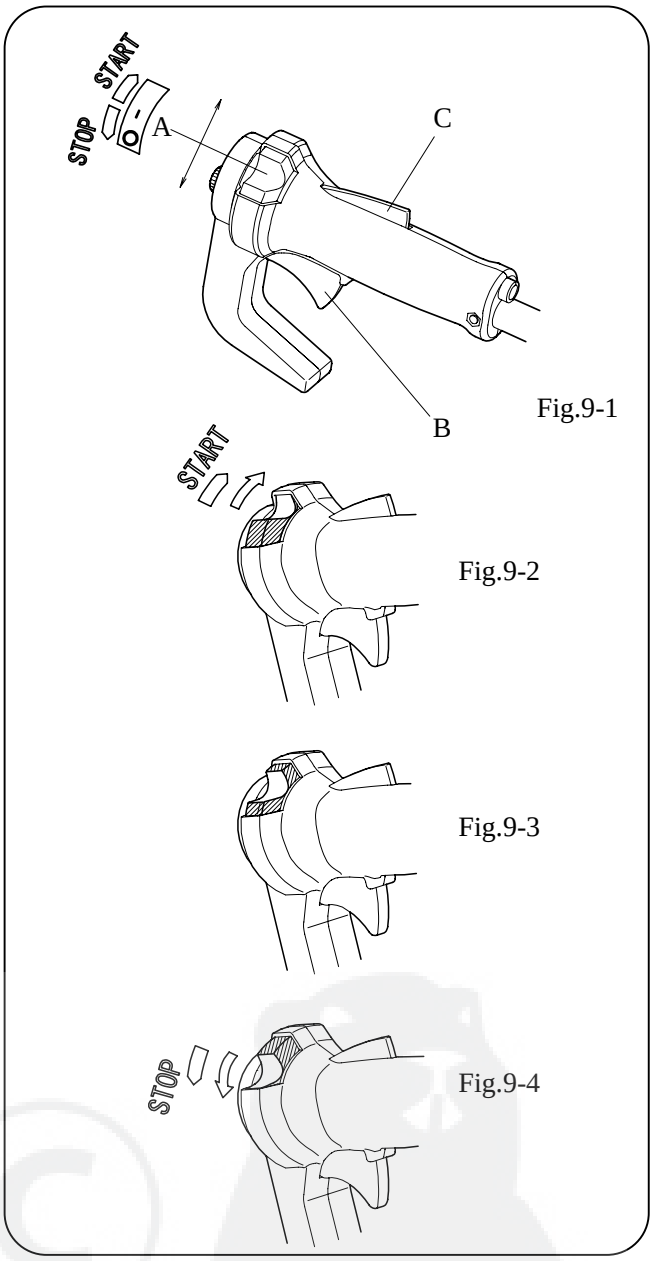

Fig.9-1
Fig.9-2
Fig.9-3
Fig.9-4

STARTING THE ENGINE

- **ENGINE MODEL: GX Series , TLE Series**

  First, press the safety lever (C), and fully hold the lever (B).Release your hand from the lever (B) in state with the knob (A) pushed in the "→START" direction (Fig. 9-2). Then,the throttle is fixed in the middle speed position to facilitate easy start of the engine.

  Start the engine in accordance with the engine operation manual. After start of the engine hold the lever (B) again, and leave your hand from it. Throttle advance is cancelled,and the engine is put in the idling state. At that time, the knob (A) moves to the position shown in Fig. 9-3.

• **ENGINE MODEL: TJ Series**

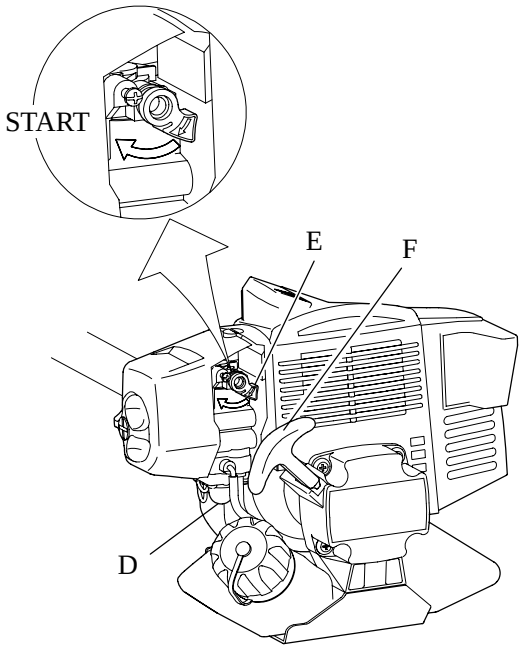

Fig.9-5

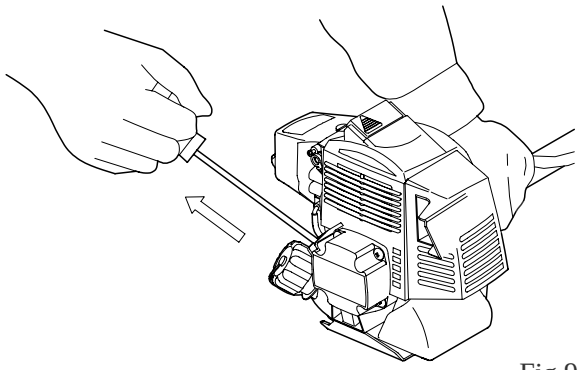

Fig.9-6

Push knob (A) in the "→START" direction (Fig. 9-2).
Push the priming pump (D) several times (Fig. 9-5).
Move the choke lever (E) to the "START" position (Fig. 9-5).
Pull the recoil starter grip (F) firmly and rapidly until the engine fires (Fig. 9-6).
NOTE: If you pull lever (B), the choke lever (E) will return by itself.
NOTE: Please refer to the Engine Operation Manual.

STOPPING THE ENGINE

To stop the engine, push the knob (A) in the "→ STOP" direction (Fig. 9-4).
WARNING: When the engine is switched off, the rotating part, blade or nylon string head, will keep on rotating for a few seconds. Hold the machine until all parts come to a standstill.
N.B. In an emergency the above mentioned delay in stopping may be shortened by touching the blade parallel to the grounds.

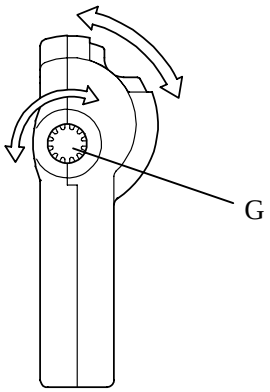

Fig.9-7

The knob (G) on the control lever is a throttle positioner.(Fig. 9-7)
Turn the knob clockwise, and the engine rotational speed changes toward the lower speed side when the lever (B) is operated. The speed can be set to the higher side when the knob is turned anticlockwise. Select the knob position in conformance with the working condition.
N.B. If the knob is fastened excessively (clockwise), it becomes impracticable to lock the knob (A) in the "→ START" position.

MODEL: V242L V262L

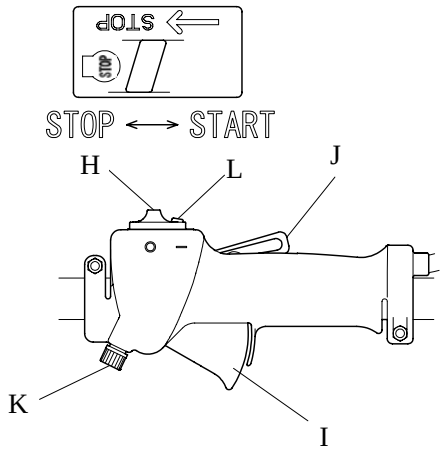

Fig.9-8

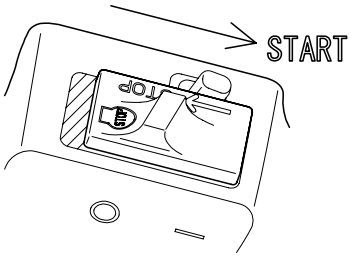

Fig.9-9

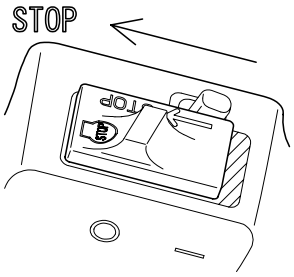

Fig.9-10

STARTING THE ENGINE

- **ENGINE MODEL: GX Series , TLE Series**

  Press lever (J) and hold lever (I). Release levers (J) and (I) while keeping knob (L) pressed. The throttle lever (I) is now in its partial acceleration position, in order to let the engine start more quickly and easily. Push knob (H) in the "→START" direction (Fig. 9-9).

  Start the engine according to its operation and maintenance manual.

  After starting the engine, pull throttle lever (I) once again and release it right away in order to unlock it from the partial acceleration position and to let the engine idle when lever (I) is released.

- **ENGINE MODEL: TJ Series**

  Push knob (H) in the "→START" direction (Fig. 9-9).

  Push the priming pump (D:Fig. 9-5) several times.

  Move the choke lever (E:Fig. 9-5) to the "START" position.

  Pull the recoil starter grip (F:Fig. 9-5) firmly and rapidly until the engine fires (Fig. 9-6).

  NOTE: If you pull lever (I), the choke lever (E:Fig. 9-5) will return by itself.

  NOTE: Please refer to the Engine Operation Manual.

STOPPING THE ENGINE

In order to stop the engine, press button (H) into its" STOP" position (Fig. 9-10).

WARNING: When the engine is switched off, the rotating part, blade or nylon string head, will keep on rotating for a few seconds. Hold the machine until all parts come to a standstill.

NOTE: In the event of an emergency, the time required for the disc or the string cutter head to stop can be reduced by resting the cutting tool level onto the ground. The ring nut (K) located on the control handle is for adjusting the engine.

By turning ring nut (K) clockwise, the engine rpm is reduced during the subsequent use of throttle lever (I).

Conversely, turning ring nut (K) counterclockwise raises the engine rpm.

Therefore, adjust ring nut (K) according to the operating conditions.

[10] HARNESS HANDLING METHOD

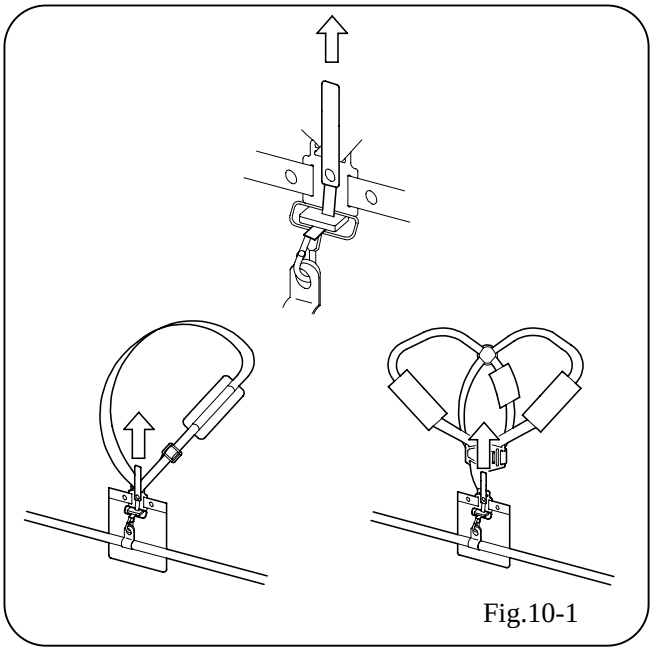

Fig.10-1

In normal use of the reaper, set the harness side hook on the hanger strap stem securely before starting the work. This applies to both single and double harness. (Fig. 10-1)

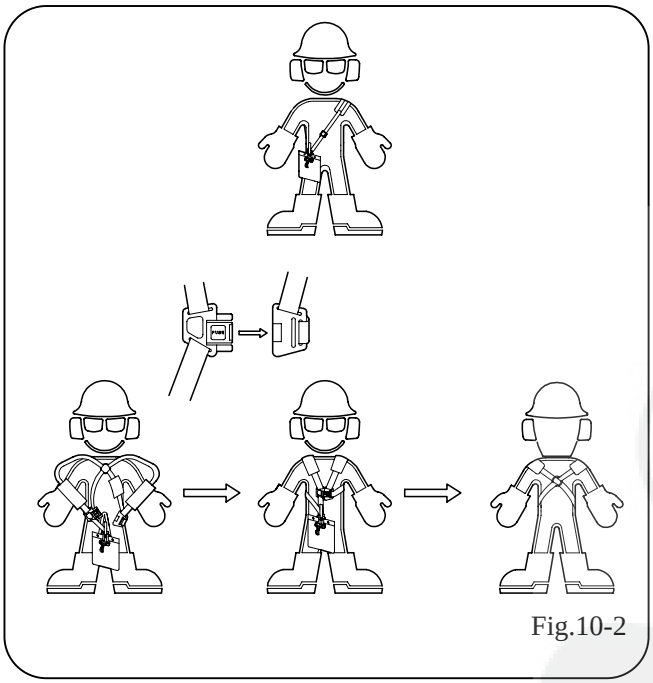

Fig.10-2

For the harness fitting method, see Fig. 10-2.

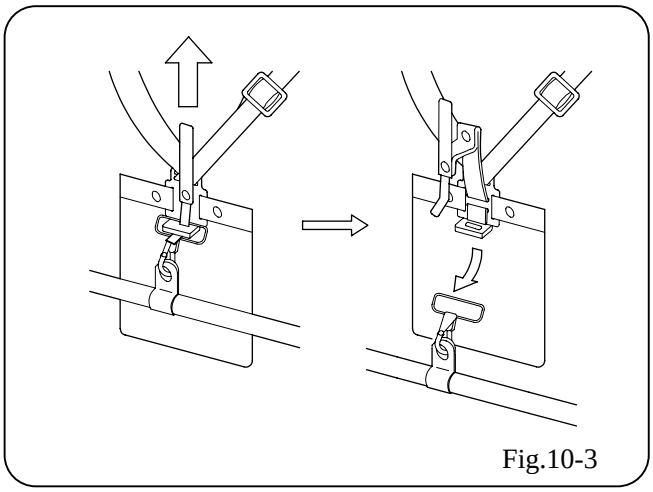

Fig.10-3

In the case of an emergency pull up the belt (red), and the total machine can be separated from the harness. Be careful not to operate the belt carelessly except for a case of emergency. (Fig. 10-3)

[11] REGULAR MAINTENANCE

From time to time make sure all brush cutter screws are firmly secured. Replace damaged, worn, cracked or warped-blades. Always make sure nylon string head and blade have been assembled correctly (see section BLADE AND NYLON STRING HEAD ASSEMBLY) and blade fastener is tightened.

1. AIR FILTER

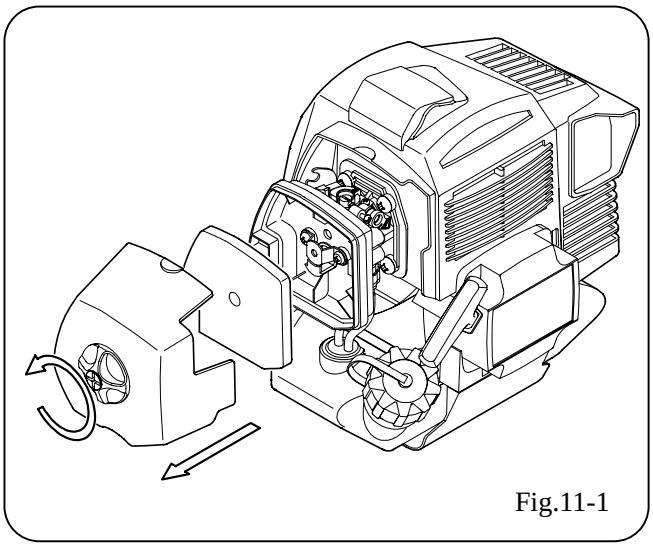

Fig.11-1

AIR FILTER CLEANING (at least every 25 working hours). A dust clogged air filter may cause carburetor problems. This may prevent the engine from reaching its maximum r.p.m. and cause high fuel consumption and/or difficult starting. Remove filter cover. Carefully clean the inside of filter box. The filter can also be cleaned with compressed air.

2. GEARCASE

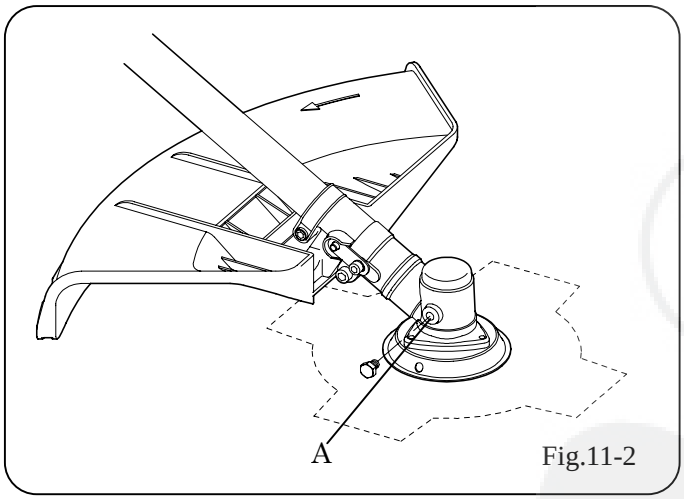

Fig.11-2

Every 50 working hours inject the gearcase with gear grease under high pressure through hole A.

3. SPARK PLUG

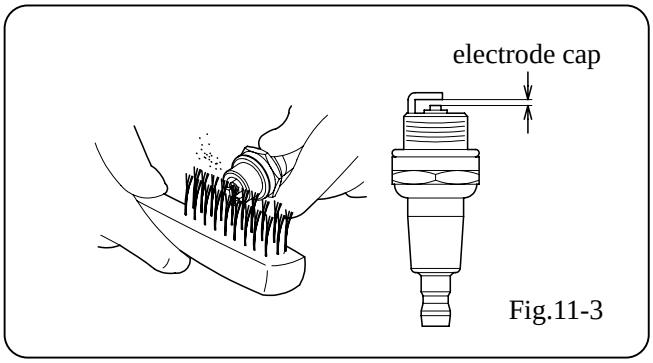

Fig.11-3

From time to time (at least every 50 hours) remove and clean the spark plug and check the electrode cap. Replace spark plug about every 100 working hours or whenever it is extremely encrusted.

Heavily encrusted electrodes can result from an incorrect carburetor setting or from wrong fuel mixture (too much oil in the petrol) or a poor quality oil in the fuel mix. Check and correct.

Please refer to the Engine Operation Manual for information about changing the spark plug and the electrode cap.

[12] FAULT FINDING TABLE

	Engine will not start.	Engine will not Start of run badly.	The brush cutter does not cut well.	Engine runs fast but loses power when cutting.
Check STOP switch is in the position I.	●	●		
Control fuel level min. 25% tank capacity.	●	●		
Check air filter is clean.		●		
Remove spark plug, dry it, clean it and adjust it, and replace it, if necessary.	●	●		
Control and adjust the carburetor screws if necessary.		●	●	●
Change fuel filter. Contact your dealer.				●
Carefully follow the blade assembly instructions.			●	
Check blade is sharp. Otherwise, contact you dealer.			●	