SP 41 E

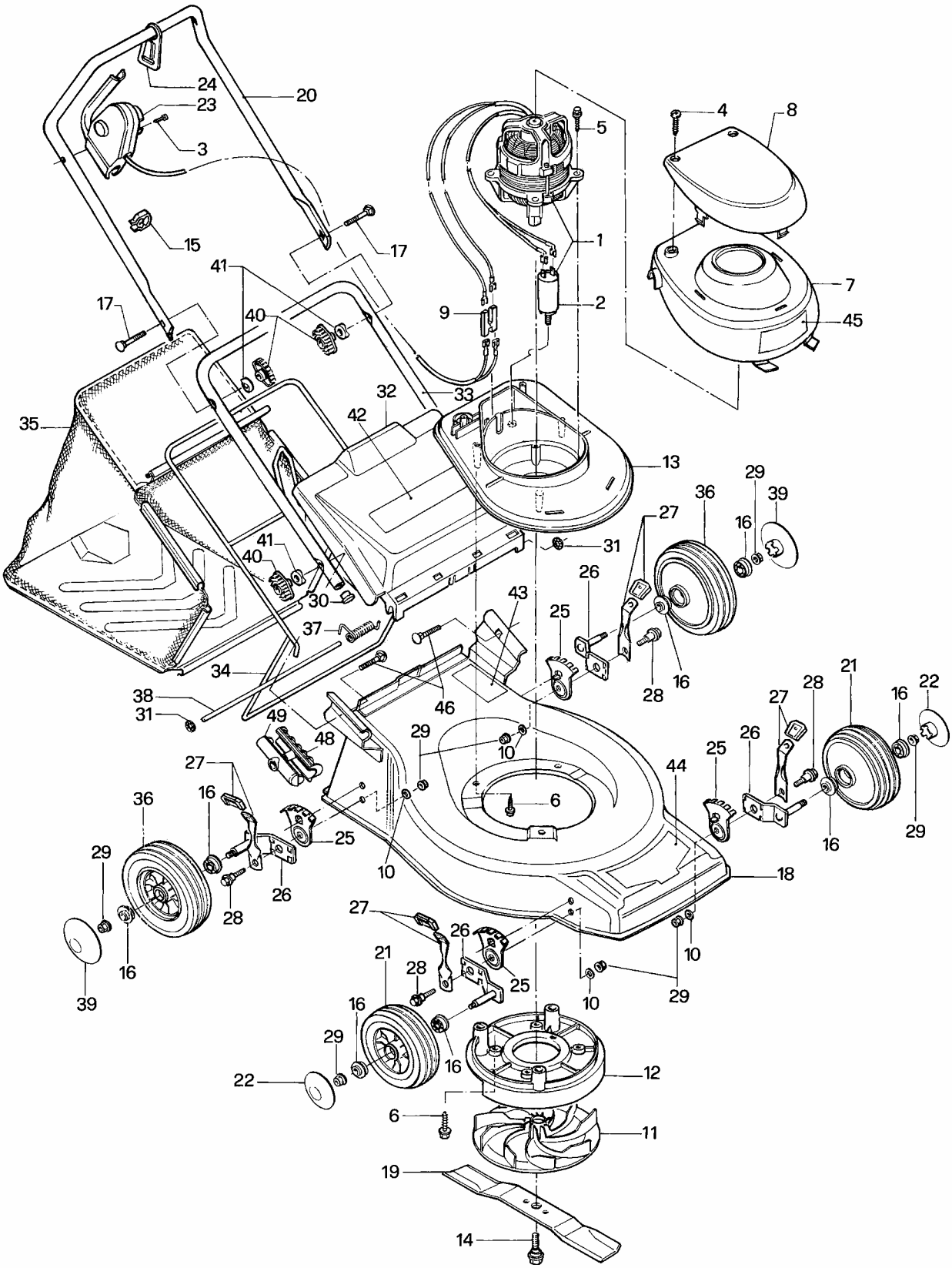
24
23
20
3
4
8
5
15
17
1
41
7
17
40
9
2
45
32
33
35
42
13
29
36
39
27
16
41
31
40
26
30
43
25
37
16
34
28
21
22
38
46
27
28
16
31
49
29
26
48
10
25
44
27
36
16
6
25
29
10
18
26
28
16
27
26
10
21
28
25
29
10
39
16
29
16
12
22
6
11
19
14

MA.RI.NA. SP 41 E

POS.	CODICE	I	F	D	GB	E	Q.TA'
1	CP017130F	MOTORE EL. 1300 W	MOTEUR	MOTOR	ENGINE	MOTOR	1
2	CP019816	CONDENSATORE 16 M	CONDENSATEUR	KONDENSATOR	CONDENSER	CONDENSADOR	1
3	CP023925	VITE AUTOF.	VIS	SCHRAUBE	SCREW	TORNILLO	2
4	CP025030	VITE AUTOF.	VIS	SCHRAUBE	SCREW	TORNILLO	2
5	CP026030	VITE AUTOF.	VIS	SCHRAUBE	SCREW	TORNILLO	4
6	CP026322	VITE AUTOF.	VIS	SCHRAUBE	SCREW	TORNILLO	7
7	CP032102	CUPOLINA INF. BIANC	CALOTTE	VERKLEIDUNG	COVER	CARCASA	1
8	CP032103.12	CUPOLINA SUP. TURC	CALOTTE	VERKLEIDUNG	COVER	CARCASA	1
9	CP019910	MORSETTO	ATTACHE CABLE	KABELBESCHWERER	CLIP	FIJADOR CABLE	1
10	CP032909	RONDELLA	RONDELLE	SCHEIBE	WASHER	ARANDELA	4
11	CP040158	VENTOLA	VENTILATEUR	LAUFRAD	FAN	VENTILADOR	1
12	CP040174	CONVOGLIATORE	CALOTTE	LAUFRADGEHÄUSE	FAN BOX	CARCASA	1
13	CP040175	BASE MOTORE	PORTE MOTEUR	MOTORGEHÄUSE	MOTOR BOX	BASE MOTOR	1
14	CP040209	VITE LAMA	VIS	SCHRAUBE	SCREW	TORNILLO	1
15	CP040222	FERMACAVO	ATTACHE CABLE	KABELBESCHWERER	CLIP	FIJADOR CABLE	1
16	CP040226	BOCCOLA	BOUCLE	BÜCHSE	BUSH	COJINETE	8
17	CP040850	VITE TTQST	VIS	SCHRAUBE	SCREW	TORNILLO	2
18	CP041002.12	CHASSIS TURCHESE	CARTER	GEHÄUSE	DECK	CHASIS	1
19	CP041010	LAMA	LAME	MESSER	BLADE	CUCHILLA	1
20	CP042038	MANICO SUP.	GUIDON	STIEL	HANDLE	MANILLAR	1
21	CP042109	RUOTA 150	ROUE	RAD	WHEEL	RUEDA	2
22	CP042127	COPRIRUOTA 150	CACHE MOYEU	RADDECKUNG	HUB CAP	TAPA RUEDA	2 (>= 04/2004)
22	CP042128	COPRIRUOTA 150	CACHE MOYEU	RADDECKUNG	HUB CAP	TAPA RUEDA	2 (< 04/2004)
23	CP042185	INTERRUTTORE	INTERRUPTEUR	SCHALTER D-I-F-A-B-N	SWITCH	INTERRUPTOR	1
24	CP042222	SUPPORTO CAVO	PORTE CABLE	KABELHALTER	CABLE SUPPORT	FIJADOR CABLE	1
25	CP042245	SETTORE	SECTEUR	PLATTE	SECTOR	PLACA ALTURAS	4
26	CP042248	SUPPORTO	SUPPORT	ACHSELAGER	SUPPORT	SOPORTE	4
27	CP042250	LEVA ALZO	LEVIER	STANGE	LEVER	LEVA ALTURAS	4
28	CP042268	VITE	VIS	SCHRAUBE	SCREW	TORNILLO	4
29	CP042808	DADO	ÉCROU	MUTTER	KNOB	ESPARRAGO	8
31	CP046607	RITEGNO	CLIP	RÜCKHALT	RETAINER	ANILLO CLIP	2
32	CP047018	PARASASSI	DEFLECTEUR	DEFLEKTOR	REAR DOOR	DEFLECTÓR	1
33	CP047032	MANICO INF.	GUIDON	STIEL	HANDLE	MANILLAR	1
34	CP047078	TELAIO CESTO	ATTELAGE	GRASFANGRAHMEN	FRAME	ARMAZON SACO	1
35	CP047083.05	TELA CESTO NERA	SAC RAMASSEUR	GRASFANGSACK	GRASS BAG	SACO TELA	1
36	CP047109	RUOTA 180	ROUE	RAD	WHEEL	RUEDA	2
37	CP050192	MOLLA PARASASSI	RESSORT	FEDER	SPRING	MUELLE	1
38	CP047203	ASTINA	AXE PIVOT	STANGE	HINGE PIN	EJE DEFLECTÓR	1
39	CP050127	COPRIRUOTA 180	CACHE MOYEU	RADDECKUNG	HUB CAP	TAPA RUEDA	2 (>= 04/2004)
39	CP050128	COPRIRUOTA 180	CACHE MOYEU	RADDECKUNG	HUB CAP	TAPA RUEDA	2 (< 04/2004)
40	CP050228	POMOLO MANICO	ÉCROU	GRIFF	KNOB HANDLE	POMO MANILLAR	4
41	CP050230	RONDELLA	RONDELLE	SCHEIBE	WASHER	ARANDELA	2
42	CP053714	DECALCO	DECALQUE	ETIKETTE	DECAL	CARTEL	1
43	CP053813	DECALCO	DECALQUE	ETIKETTE	DECAL	CARTEL	1
44	CP053862	DECALCO SPARTAN	DECALQUE	ETIKETTE	DECAL	CARTEL	1
45	CP053890	DECALCO	DECALQUE	ETIKETTE	DECAL	CARTEL	1
46	CP040860	VITE TTQST	VIS	SCHRAUBE	SCREW	TORNILLO	2
48	CP042212M	ISOLATORE 1/2 MASC	DEMI ISOLATEUR	HALF ISOLATOR	HALF INSULATOR	MITAD AISLADOR	2
49	CP042212F	ISOLATORE 1/2 FEMM	DEMI ISOLATEUR	HALF ISOLATOR	HALF INSULATOR	MITAD AISLADOR	2