430高枝锯爆炸图

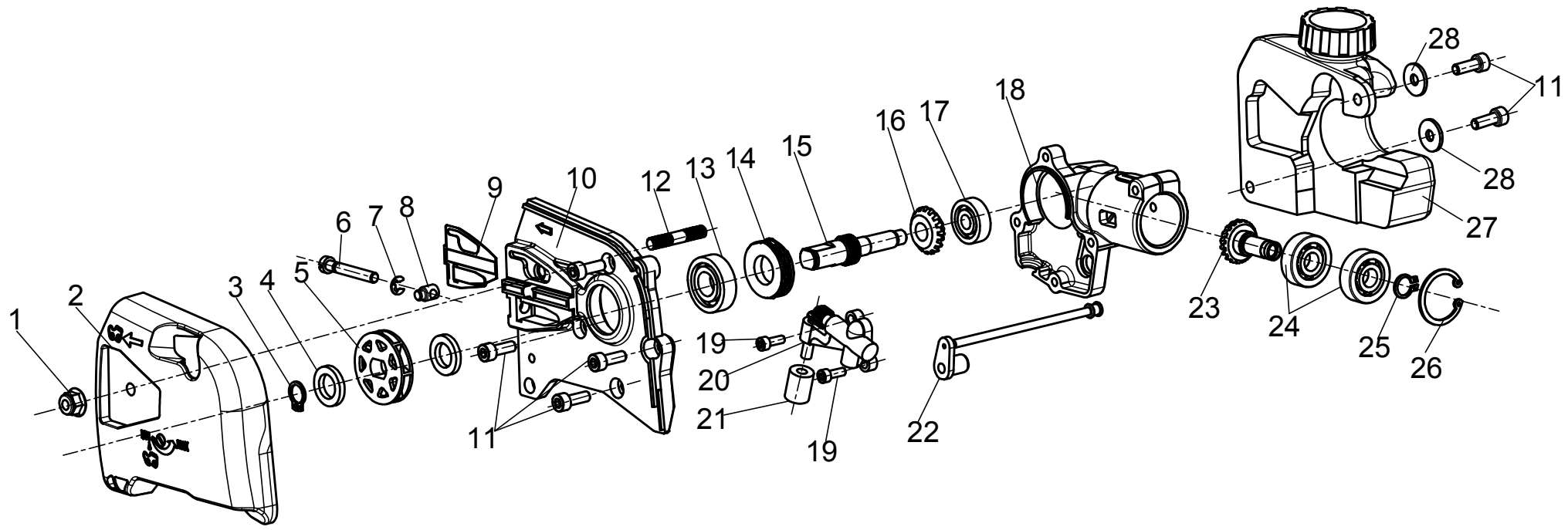

DY430 High Grab Saw Explosion Chart Detail

page1/1

NO	Part num	Descripition(Cn)	Descripition(En)	Quantity
1		全金属法兰防松螺母M6	Hexagon Flange Lock Nut M6	1
2		链轮盖板	Sprocket cover	1
3		轴用弹性挡圈12	Shaft with elastic ring 12	1
4		平垫片12×20×3	Flat washer 12 × 20 × 3	2
5		链轮	Sprocket	1
6		调节螺栓M5	Adjust the bolt M5	1
7		E型挡圈4	E-ring 4	1
8		调节螺母M5	Adjust the nut M5	1
9		红钢纸垫	Red steel paper pad	1
10		高枝锯大箱体	High branch saw large box	1
11		内六角螺钉M5×14	Hexagon Socket Screws M5 × 14	6
12		双头螺栓M6	Studs M6	1
13		轴承6001-2RS	Bearing 6001-2RS	1
14		蜗杆	Worm	1
15		输出轴	Output shaft	1
16		高枝锯从动齿轮	High-saw saw driven gear	1
17		轴承627-2Z	Hex combination screw \ M5 × 35	1
18		高枝锯小箱体	High branch saw small box	1
19		内六角螺钉M4x10	Hexagon Socket Screws M4x10	2
20		机油泵组件	Oil pump components	1
21		海绵套	Sponge sets	1
22		油管	Tubing	1
23		高枝锯主动齿轮	High-saw saw drive gear	1
24		轴承6000-2RS	Bearing 6000-2RS	2
25		轴用弹性挡圈10	Shaft with elastic ring 10	1
26		孔用弹性挡圈26	Hole with elastic ring 26	1
27		油壶总成	Oil tank assembly	1
28		平垫片16×5.5×1.5	Flat washer 16 × 5.5 × 1.6	2