PDF Complete
Your complimentary use period has ended. Thank you for using PDF Complete.
Click Here to upgrade to Unlimited Pages and Expanded Features

MASTER PARTS MANUAL

GARDEN TRACTOR

ATTACHMENTS

MODELS:

TT2041R0	TT6031R1	HA0232R0
TT2131R	TT6131R0	HA0231R
TT2231R	TT6231R0	
TT2631R0	TT6431R0	
TT3042R0	TT6951R	D2117AR
TT4031R0		D3217AR
TT4131R0	TA157AR	D44152R1
TT4241R0	TA1331R0	D54252R1
TT4331R0	TA207AR	D84351R1
TT4431R0		
TT4631R0	H30031R0	
TT4931R0	H60031R0	
TT5031R1	H60042R0	
TT5051R0		
TT517AR		
TT5251R		

LAWN AND GARDEN
POWER EQUIPMENT

ROPER SALES

1905 WEST COURT STREET
KANKAKEE, ILLINOIS 60901

618J
6.1.77
PRICE $2.00

PDF Complete
Your complimentary use period has ended. Thank you for using PDF Complete.
Click Here to upgrade to Unlimited Pages and Expanded Features

ROPER 38" ROTARY MOWER–MODEL NO. TT2041R0

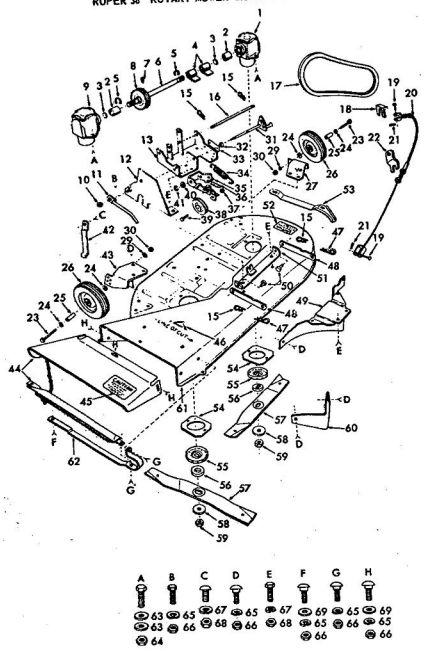

ROPER 38" ROTARY MOWER–MODEL NO. TT2041R0

KEY NO.	PART NO.	DESCRIPTION
1	794042	Head Assembly L.H.
2	786028	Coupling, Input Connector
3	788039	Disc, Felt
4	2037R	Wiper Sleeve
5	5231H	Cresent Ring
6	776085	Shaft, Input Connector
7	792027	Set Screw, Knurled Hd. C. P. 5/16-24 x ¾
8	786059	Sheave
9	794041	Head Assembly R.H.
10	511P	Nylock Nut 3/8-24
11	626A271	Blade Clutch Handle
12	7717H2	Pulley Guard
13	626A355	Housing Mount Assembly
15	4939M	Retainer Spring
16	957R	Pivot Shaft
17	1563R	V-Belt
18	2259R	Spring Clip
19	2292R	Rivet Pin
20	2547R	Mower Clutch Cable
21	2503P	Cotter Pin 3/32 x ¾
22	2540R	Clutch Cable Anchor
23	3199P	Hex Bolt 3/8-24 x 2¾
24	1556P	Washer 13/32 x 7/8 x 14 Ga.
25	7375H	Bushing
26	9530H	Wheel, Gauge
27	626A283	Wheel Bracket Assembly L.H.
29	1004P	Lockwasher 3/8
30	515P	Hex Nut 3/8-24
31	626A342	Control Arm Assembly
32	2510R	Spacer
33		Model Plate
34	2537R	Spring
35	626A372	Idler Bracket Assembly
36	3382R	Decal
37	548P	Hex Jam Nut 3/8-24
38	1342R	Idler Pulley
39	2257P	Hex Bolt 3/8-24 x 1¼
40	1545P	Washer 17/32 x 1 x 16 Ga.
41	5002P	E-Ring Truarc 5133-50
42	8310H1	Pulley Guard Guide
43	626A284	Wheel Bracket Assembly R. H.
44	626A356	Deflector Assembly w/chain
45	3338R	Deflector-Caution Decal
46	3229R	Safety Standard Sticker
47	4940H	Retainer Spring
48	5050H	Pivot Link Front
49	626A286	Blade Shield Assembly
50	1032R	Pivot Pin
51	626A352	Mower Housing Mounting Weldment
52	3539R	Instruction-Caution Decal
53	3848R	Runner L. H.
54	1567R	Mandrel Plate
55	786044	Shield
56	1044R	Blade Safety Drive
57	2464R	Blade (Cat. No. 25062)
58	9914M	Spring Washer
59	529P	Nylock Nut 5/8-18
60	968R	Blade Shield Outlet
61	759R	Mower Housing
62	960R	Runner R. H.
63	1557P	Washer 13/32 x 13/16 x 11 Ga.
64	545P	Crown Locknut 3/8-16
65	1003P	Lockwasher 5/16
66	504P	Hex Nut 5/16-18
67	1004P	Lockwasher 3/8
68	501P	Hex Nut 3/8-16
69	1537P	Washer 11/32 x 11/16 x 16 Ga.
A	3137P	Hex Bolt 3/8-16 x 1¼ Grade 5 H. T.
B	3159P	Hex Bolt 5/16-18 x 7/8
C	3223P	Slotted Rd. Hd. Mach. Screw 3/8-16 x ¾
D	16P	Carriage Bolt 5/16 x ¾
E	3023P	Hex Bolt 3/8-16 x 1
F	17P	Carriage Bolt 5/16-18 x 1
G	17P	Carriage Bolt 5/16-18 x 1
H	16P	Carriage Bolt 5/16-18 x ¾
---	5091R	Owners Manual and Parts List

ROPER 38" ROTARY MOWER–MODEL NO. TT2041R0

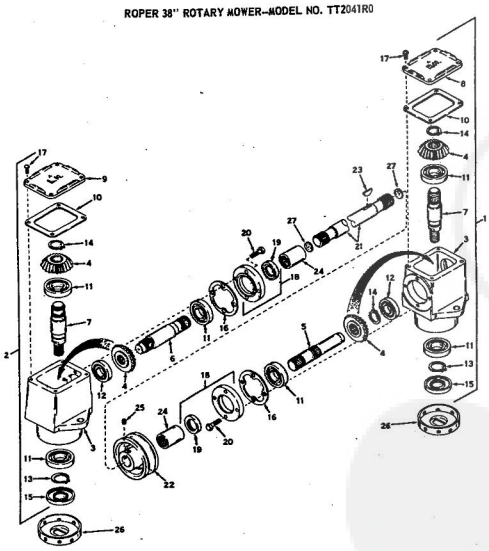

ROPER 38" ROTARY MOWER–MODEL NO. TT2041R0

KEY NO.	PART NO.	DESCRIPTION
1	794041	Head Assy., Right Hand (Incl. Nos. 3, 4, 5, 7, 8 and 10 thru 20)
2	794042	Head Assy., Left Hand (Incl. Nos. 3, 4, 6, 7 and 9 thru 20)
3	770026	Housing, Right Angle Drive
4	778046	Gear, Miter
5	776040A	Shaft, Input Pinion
6	776041	Shaft, Input Pinion
7	776092	Shaft, Output
8	772034	Cover, Right Hand
9	772035	Cover, Left Hand
10	788028	Gasket, Cover
11	780034	Bearing, Ball
12	780024	Bearing, Ball
13	788019	Ring, Snap
14	788018	Ring, Snap
15	788029	Seal, Oil
16	788030	Gasket, Cap
17	792025	Screw, Rd. Hd. Self Top, 10 - 24 x ½
18	786029	Cap and Seal Assy., Reta (Incl. Nos. 19 & 20)
19	788031	Seal, Oil
20	792026	Screw, Hex Hd. ¼ - 20 x 7
21	776085	Shaft, Input Connector
22	786059	Sheave
23	792047	Key, Woodruff, 3/16 x 3/4
24	786028	Coupling, Input Shaft
25	792027	Set Screw, Knurled Hd. C Pt., 5/16 - 24 x 1/4
26	786044	Shield
27	788039	Disc, Felt

ALL PARTS ON THIS PAGE MUST BE PURCHASED THROUGH YOUR LOCAL TECUMSEH DEALER.

PDF Complete
Your complimentary use period has ended. Thank you for using PDF Complete.
Click Here to upgrade to Unlimited Pages and Expanded Features

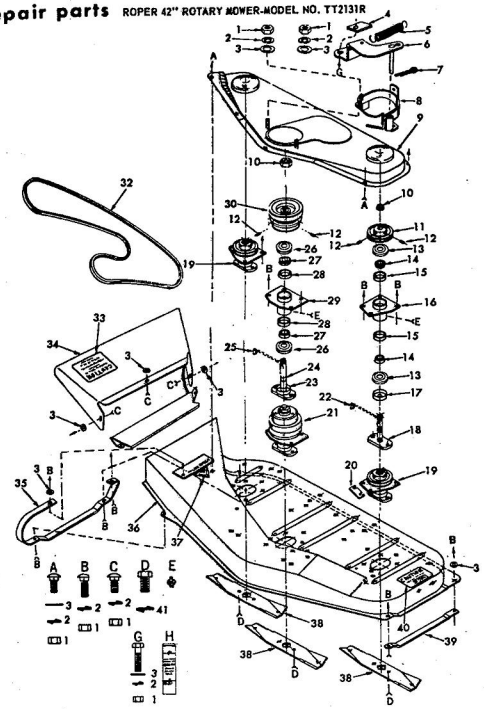

ROPER 42" ROTARY MOWER-MODEL NO. TT2131R

KEY NO.	PART NO.	DESCRIPTION
1	504P	Hex Nut 5/16-18
2	1003P	Lockwasher 5/16
3	1537P	Washer 11/32 x 11/16 x 16 Ga.
4	2629R	Brake Shoe
5	3770R	Spring
6	634A590	Snubber Weldment
7	2503P	Cotter Pin 3/32 x 3/4
8	634A588	Belt Guide Weldment-Center
9	634A482	Deck Drive Cover & Weld Bolts
10	4831H	Elastic Stop Nut 3/4-16
11	634A417	Mandrel Sheave-Outer w/Set Screws
12	4515P	Hex Socket Headless Set Screw 3/8-16 x 3/8
13	881R	Metallic Seal
14	1554H	Bearing Cone
15	1553H	Bearing Cup
16	634A431	Mandrel Tube & Cups
17	9458H	Mandrel Cap
18	634A315	Shaft & Flange-Outer
19	634A423	Mandrel Assembly w/Sheave Outer
20	5951R	Mandrel Shim-L.H.
21	634A485	Mandrel Assembly w/Sheave-Center
22	8330H	Woodruff Key ¼-1 H.T.
23	1036R	Mandrel Cap Center
24	634A426	Shaft & Flange-Center
25	880R	Woodruff Key ½ x
26	882R	Metallic Seal
27	9494H	Bearing Cone
28	888R	Bearing Cup
29	634A427	Mandrel Tube & C Center
30	634A481	Mandrel Sheave-C w/Set Screw
32	6942R	V-Belt (Center to Mandrels)
33	3538R	Deflector-Caution
34	634A498	Deflector Shield w
35	3724R	Runner R.H.
36	3863R	Mower Housing
37	3239R	Safety Standards S
38	9484H	Blade
39	2070R	Runner L.H.
40	3539R	Instruction-Caution Decal
41	1001P	Lockwasher 7 16
A	16P	Carriage Bolt 5/16
B	17P	Carriage Bolt 5/16
C	16P	Carriage Bolt 5/16
D	3204P	Hex Bolt 7/16 x 1 H.T. Grade 5
G	6855M	Grease Fitting
H	3011P	Hex Bolt 5/16-18
	2557R	Andex No. 1 E.P. Grease Nat Furnish with Mower (For Se Only)

ROPER 42" ROTARY MOWER-MODEL NO. TT2131R

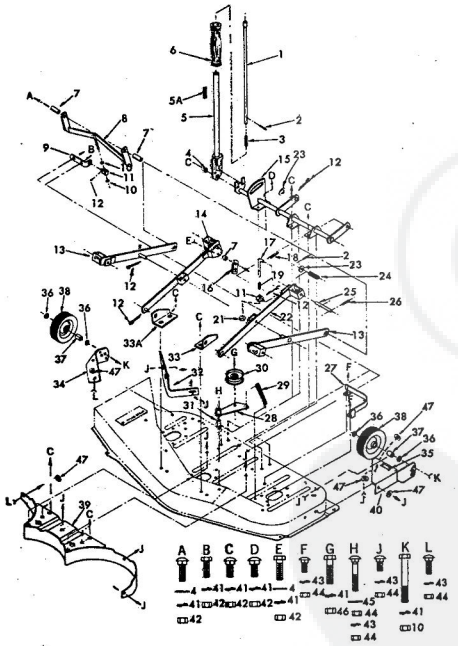

ROPER 42" ROTARY MOWER MODEL NO. TT2131R

KEY NO.	PART NO.	DESCRIPTION	KEY NO.	PART NO.	DESCRIPTION
1	634A339	Lever Plunger & Button	32	2289R	Discharge Cutoff Plate
2	9465M	Roll Pin 3/16 x 1½	33	3544R	Suspension Bracket-Front L.H.
3	9504H	Spring			
4	1556P	Wheel Hub	33A	3543R	Suspension Bracket-Front R.H.
5	634A373	Lift Lever			
5A	1053R	Decal	34	2073R	Wheel Support R.H.
6	2895H	Handle Grip	35	1556P	Model Plate
7	2304M	Bushing	36	1556P	Wheel 13/32 x 7/8 x 14 Ga.
8	634A435B	Pedal Adjustment Weldment	37	7375H	Bushing
9	9426H	Bracket	38	9536H	Gauge Wheel
10	515P	Hex Nut 3/8-24	39	634A329	Blade Shield Assembly
11	9420H	Leveling Pin	40	634A480	Gauge Wheel Support
12	2311P	Cotter Pin 3/16 x 1			Lockwasher 3/8
13	634A345	Suspension Arm Weldment Outer	41	1004P	Hex Nut 3/8-16
14	634A344	Suspension Arm Weldment Inner L.H.	42	501P	Lockwasher 3/8-16
15	634A624	Lift Sleeve Weldment	43	1003P	Hex Nut 5/16-18
16	634A435B	Lift Link	44	504P	Wheel 13/32 x 7/8 x 14 Ga.
17	9412H	Hanger Link	45	1556P	Hex Jam Nut 3/8-16
18	2505P	Cotter Pin 1/8 x 3/4	46	503P	Washer 11/32 x 11/16 x 16 Ga.
19	9535H	Spring	47	1537P	Sq. Neck Carriage Bolt 3/8-16 x 1¼
			A	21P	Hex Bolt 3/8-16 x 1
21	9558H	Elastic Stop Nut 3/8-24	B	3023P	Sq. Neck Carriage Bolt 3/8-16 x 1
22	634A343	Suspension Arm Weldment Inner L.H.	C	28P	Carriage Bolt Short Shoulder 3/8-16 x 1 Grade 5 H.T.
23	1500P	Washer 17/32 x 1-1/16 x 13 Ga.	D	3025P	Hex Bolt 3/8-16 x 1¼
24	3720R	Spring	E	16P	Carriage Bolt 5/16-18 Short Shoulder 5/16-18-3/4
25	9416H	Plunger	F	17P	Carriage Bolt 5/16-18 x 1½
26	9504H	Roll Pin 3/16 x 2	G	3027P	Hex Bolt 3/8-16 x 2½
27	634A334	Belt Guide Assembly	H	7P	Carriage Bolt 5/16-18 x ¾
28	634A477	Idler Assembly	J	16P	Carriage Bolt 5/16-18 x ¾
29	9503H	Spring	K	3199P	Hex Bolt 3/8-24 x 2¼
31	9505H	Pivot Pin			Grade 5

PDF Complete
Your complimentary use period has ended. Thank you for using PDF Complete.
Click Here to upgrade to Unlimited Pages and Expanded Features

ROPER 42" ROTARY MOWER-MODEL NO. TT2131R

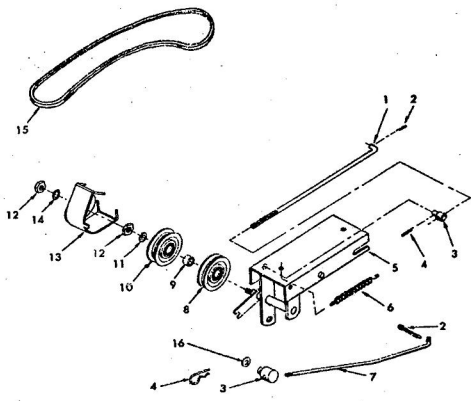

KEY NO.	PART NO.	DESCRIPTION
1	3705R	Belt Tightenrr Link
2	2610P	Cotter Pin 5/32 x 1
3	3707R	Adjusting Pin
4	4940M	Retainer Spring
5	634A619	Idler Shaft Assembly
6	9503H	Spring
7	3766R	Snubber Pull Rod
8	634A565	Inside Idler
9	5386H	Bushing
10	634A566	Outside Idler
11	1519P	Washer 15/32 x 1 x 12 Ga.
12	516P	Hex Nut 7/16-20
13	634A618	Belt Guide Weldment-Front
14	1001P	Lockwasher 7/16
15	6941R	V-Belt (Mower Main Drive Belt)
16	1569P	Washer 9/16 x 15/16 x 11 Ga.

ROPER 48" ROTARY MOWER-MODEL NO. TT2231R

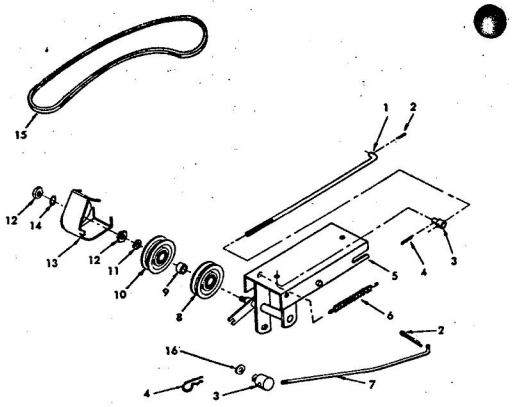

KEY NO.	PART NO.	DESCRIPTION
1	3705R	Belt Tightener Link
2	2610P	Cotter Pin 5/32 x 1
3	3707R	Adjusting Pin
4	4940M	Retainer Spring
5	634A619	Idler Shaft Assembly
6	9503H	Spring
7	3766R	Snubber Pull Rod
8	634A565	Inside Idler
9	5386H	Bushing
10	634A566	Outside Idler
11	1519P	Washer 15/32 x 1 x 12 Ga.
12	516P	Hex Nut 7/16-20
13	634A618	Belt Guide Weldment-Front
14	1001P	Lockwasher 7/16
15	6941R	V-Belt (Mower Main Drive Belt)
16	1569P	Washer 9/16 x 15/16 x 11 Ga.

ROPER 48" ROTARY MOWER-MODEL NO. TT2231R

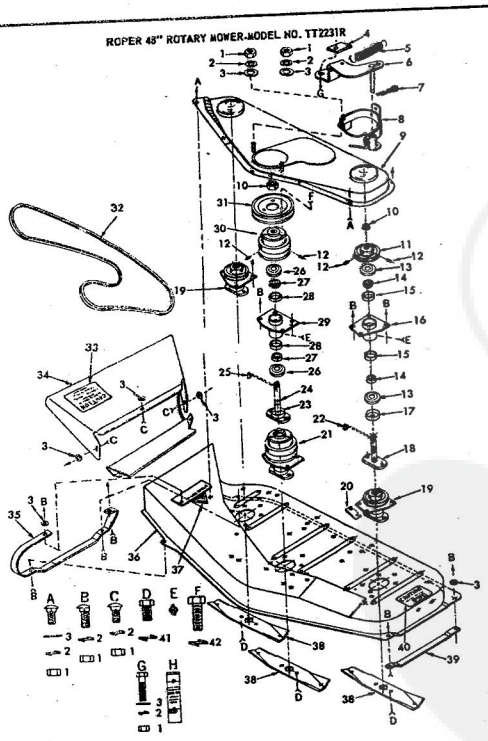

ROPER 48" ROTARY MOWER-MODEL NO. TT2231R

KEY NO.	PART NO.	DESCRIPTION
1	504P	Hex Nut 5/16-18
2	1003P	Lockwasher 5/16
3	1537P	Washer 11/32 x 11/16 x 16 Ga.
4	2629R	Brake Shoe
5	3770R	Spring
6	634A592	Snubber Weldment
7	2503P	Cotter Pin 3/32 x 3/4
8	634A591	Belt Guide Weldment-Center
9	634A484	Deck Drive Cover & Weld Bolts
10	4831H	Elastic Stop Nut 3/8-16
11	634A417	Mandrel Sheave-Outer w. Set Screws
12	4515P	Hex Socket Headless Set Screw 3/8-16 x 5/8
13	881R	Metallic Seal
14	1554H	Bearing Cone
15	1553H	Bearing Cup
16	634A431	Mandrel Tube & Cups Outer
17	9458H	Mandrel Cap
18	634A315	Shaft & Flange -Outer
19	634A423	Mandrel Assembly w/Sheave Outer
20	5951R	Mandrel Shim-L.H.
21	634A424	Mandrel Assembly w/Sheave-Center
22	8330H	Woodruff Key ¼ x 1 H.T.
23	1036R	Mandrel Cap Center
24	634A426	Shaft & Flange-Center
25	890R	Woodruff Key ¼ x 1.7 H.T.
26	882R	Metallic Seal
27	9494H	Bearing Cone
28	888R	Bearing Cup
29	634A427	Mandrel Tube & Cups-Center
30	634A419	Mandrel Sheave-Center w. Set Screw
31	2080R	Mandrel Sheave Upper Center
32	6943R	V-Belt (Center to Outer Mandrels)
33	3538R	Deflector-Caution Decal
34	634A499	Deflector Shield w/Chain
35	3725R	Runner R.H.
36	3864R	Mower Housing
37	3239R	Safety Standards Sticker
38	9485H	Blade
39	2071R	Runner L.H.
40	3539R	Instruction-Caution Decal
41	1001P	Lockwasher 7/16
42	1004P	Lockwasher 3/8
A	16P	Carriage Bolt 5/16-18 x ¾
B	17P	Carriage Bolt 5/16-18 x 1
C	16P	Carriage Bolt 5/16-18 x ¾
D	3204P	Hex Bolt 7/16 x 14 x ¾ H.T. Grade 5
E	6855M	Grease Fitting
F	3023P	Hex Bolt 3/8-16 x 1
G	3011P	Hex Bolt 5/16-18 x 1
H	2557R	Andex No. 1 E.P. Grease Not Furnished with Mower (For Service Only)

PDF Complete
Your complimentary use period has ended. Thank you for using PDF Complete.
Click Here to upgrade to Unlimited Pages and Expanded Features

ROPER 48" ROTARY MOWER-MODEL NO. TT2231R

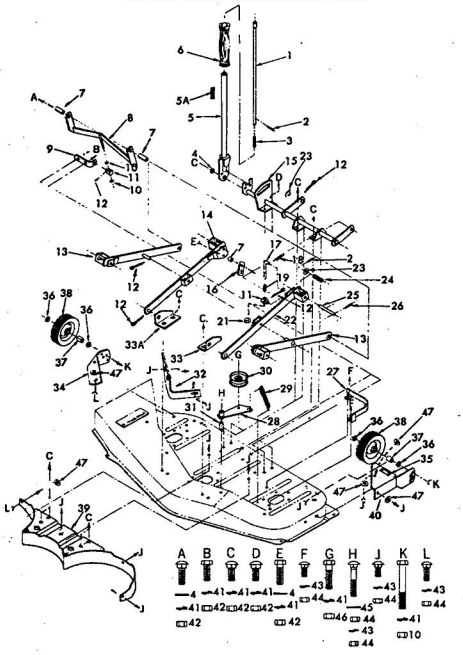

ROPER 48" ROTARY MOWER-MODEL NO. TT2231R

KEY NO.	PART NO.	DESCRIPTION
1	634A339	Lever Plunger & Button
2	9465M	Roll Pin 3/16 x 1½
3	2876H	Spring
4	1556P	Washer 13/32 x 7/8 x 14 Ga.
5	634A373	Lift Lever
5A	1053R	Decal
6	2895H	Handle Grip
7	2980M1	Bushing
8	634A358	Pitch Adjustment Weldment
9	9426H	Bracket
10	515P	Hex Nut 3/8-24
11	9420H	Leveling Pin
12	2511P	Cotter Pin 3/16 x 1
13	634A348	Suspension Arm Weldment Outer
14	634A347	Suspension Arm Weldment Inner R.H.
15	634A624	Lift Shaft Weldment
16	929R	Lift Link
17	9412H	Hanger Link
18	2505P	Cotter Pin 1/8 x ¾
19	9535H	Spring
21	9505H	Elastic Stop Nut 3/8-24
22	634A346	Suspension Arm Weldment Inner L.H.
23	1500P	Washer 17/32 x 1-1/16 x 13 Ga.
24	3720R	Spring
25	9416H	Plunger
26	9504H	Roll Pin 3/16 x 2
27	634A334	Belt Guide Assembly
28	634A477	Idler Assembly
29	9503H	Spring
30	2083R	Flat Idler
31	4969H	Bushing
32	2290R	Discharge Cutoff P
33	3544R	Suspension Bracke Front L.H.
33A	3543R	Suspension Bracke Front R.H.
34	2073R	Wheel Support R.H
35		Model Plate
36	1556P	Washer 13/32 x 7/8
37	7375H	Bushing
38	9536H	Gauge Wheel
39	634A330	Blade Shield Asser
40	634A480	Gauge Wheel Supp Assy. L.H.
41	1004P	Lockwasher 3/8
42	501P	Hex Nut 3/8-16
43	1003P	Lockwasher 5/16
44	504P	Hex Nut 5/16-18
45	1556P	Washer 13/32 x 7/8
46	508P	Hex Jam Nut 3/8-1
47	1537P	Washer 11/32 x 11/1
A	21P	Sq. Neck Carriage 3/8-16 x 1¼
B	3023P	Hex Bolt 3/8-16 x
C	20P	Sq. Neck Carriage 3/8-16 x 1
D	51P	Carriage Bolt Short 3/8-16 x ¾ Grade 5
E	3025P	Hex Bolt 3/8-16 x
F	16P	Sq. Neck Carriage Shoulder 5/16-18-¾
G	3027P	Hex Bolt 3/8-16 x
H	7P	Carriage Bolt 5/16
J	16P	Carriage Bolt 5/16
K	3199P	Hex Bolt 3/8-24 x Grade 5
L	17P	Carriage Bolt 5/16
---	4188R	Owners Manual

repair parts SICKLE BAR MOWER — MODEL NUMBER TT2631RO

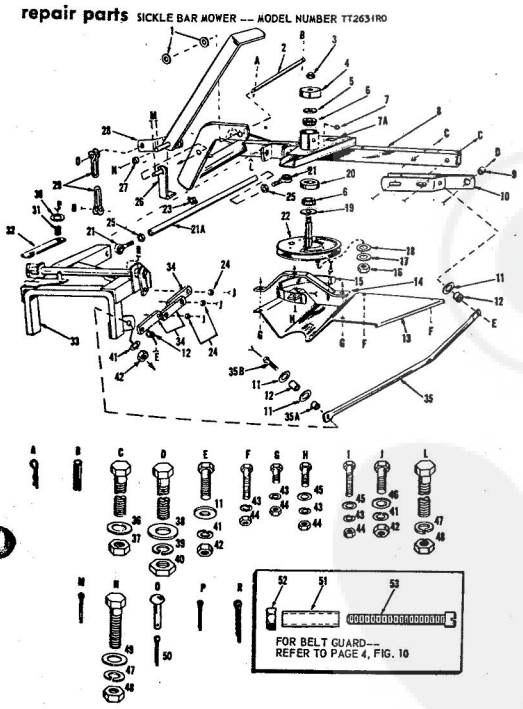

SICKLE BAR MOWER — MODEL NUMBER TT2631RO

KEY NO.	PART NO.	DESCRIPTION
1	5309H	Cushion Washer
2	5235H1	Frame Hanger Shaft
3	5304H	Elastic Stop Nut 5/8-18
4	5260H	Dust Cap
5	1503P	*Washer, 21/32 x 1-5/16 x 13 Ga.
6	1554H	Timken Cone
7	6855M	Grease Fitting
7A	------	Model Number Plate
8	634A287	Frame Weldment with Bearing Cups
9	2823M	Bushing
10	606A286	Frame Strap Front Weldment
11	1517P	*Washer, Flat 7/16 x 1 x 14 Ga.
12	5277H	Bushing
13	5282H	Flywheel Guard
14	5249H	Flywheel Guard Bracket
15	606A287	Belt Guide Weldment-Flywheel
16	357H	Huglock Nut
17	5305H	Thrust Washer
18	5306H	Thrust Washer
19	5310H	Grease Retainer Washer
20	1553H	Timken Cup
21	9244H	Spherical Rod End
21A	9242H	Pitman Tube
22	634A301	Flywheel Assembly
23	278H	Grease Fitting
24	7939M	Bushing
25	512P	*Nut, Hex Jam ASF 5/8-18 UNF Plated
26	606A290	Transport Stop and Rivet
27	6523H	Bushing
28	634A286	Foot Lever Weldment
29	5234H	Clevis
30	1513P	*Washer, 13/32 x 13/16 x 16 Ga.
31	1542U	Spring
32	5252H	Cutter Bar Latch
33	606A278	Yoke Weldment
34	5296H	Lift Link
35	5237H	Pull Rod
35A	3224M	Bushing
35B	3029P	*Bolt, Hex 3/8-16 UNC x 2½ Plated
36	1522P	*Washer, ½ x 1½ x 14 Ga.
37	500P	*Hex Nut, 7/16-14
38	1503P	*Washer, 21/32 x 1-5/16 x Cad. Plated
39	1008P	*Lockwasher 5/8 Cad. Pl
40	506P	*Hex Nut, 5/8-11 Cad. Pl
41	1004P	*Lockwasher, 3/8
42	500P	*Hex Nut, 3/8-16
43	1003P	*Lockwasher, 5/16
44	504P	*Hex Nut, 5/16-18
45	1537P	*Washer, 11/32 x 11/16 x Cad. Plated
46	1517P	*Washer, 7/16 x 1 x 14 G
47	1000P	*Lockwashers, ½ Cad. Pl
48	502P	*Nut, Hex ½-13 Cad. Plat
49	1501P	*Washer, 9/16 x 1-3/8 x 1
50	2505P	*Cotter Pin, 1/8 x ¾
51	8238H	Split Spacer
52	347H	Huglock Nut
53	3154P	*Machine Screw, Slotted Hd. ¼-20 UNC x 3/4 Pla
A	4940M	Retainer Spring
B	1572H	Roll Pin
C	3040P	*Bolt, Hex 7/16-14 x 3
D	3049P	*Bolt, Hex 5/8-11 x 2 Car
E	3025P	*Bolt, Hex 3/8-16 x 1¼
F	3016P	*Bolt, Hex 5/16-18 x 2¼
G	3010P	*Bolt, Hex 5/16-18 x ¾ C
H	3011P	*Bolt, Hex 5/16-18 x 1
I	3016P	*Bolt, Hex 5/16-18 x 2¼
J	3023P	*Bolt, Hex 3/8-16 x 1
L	3047P	*Bolt, Hex ½-13 x 3¼
M	2505P	*Cotter Pin, 1/8 x ¾
N	3046P	*Bolt, Hex ½-13 x 2½
O	5297H	Drilled Rivet
P	2511P	*Cotter Pin 2/16 x 1
R	2512P	*Cotter Pin 3/16 x 1¼
---	3936R	Instruction and Parts Bo

*Standard Hardware Item—Purchase Locally.

PDF Complete
Your complimentary use period has ended. Thank you for using PDF Complete.
Click Here to upgrade to Unlimited Pages and Expanded Features

SICKLE BAR MOWER — MODEL NUMBER TT2631RO

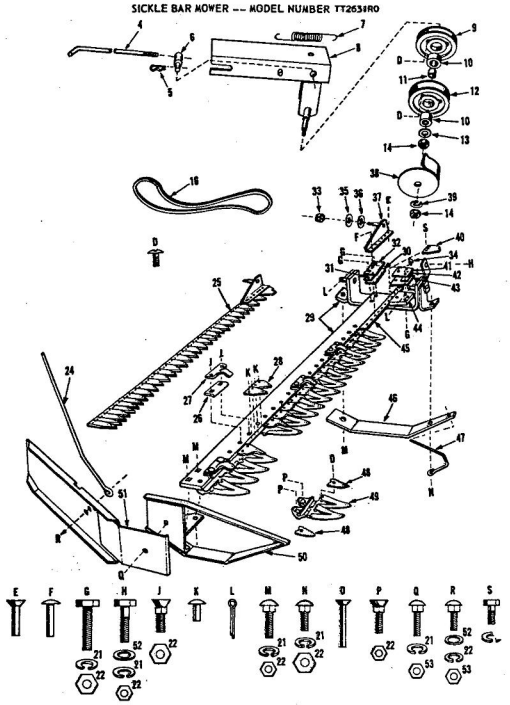

SICKLE BAR MOWER — MODEL NUMBER TT2631RO

KEY NO.	PART NO.	DESCRIPTION
4	6499H	Belt Tightener Link
5	4940M	Retainer Spring
6	6501H	Adjusting Pin
7	4301H	Spring
8	606A294A	Idler Shaft Assembly
9	606A296	Idler and Bearing-Inner
10	697H	Bearing
11	5386H	Bushing
12	606A295	Idler and Bearing-Outer
13	1544P	*Washer, Flat 15/32 x 1 x 12 Ga.
14	516P	*Nut, Hex 7/16-20 UNF
16	5308H	V-Belt (Engine to Flywheel)
21	1003P	*Lockwasher, 3/8 Cad. Plated
22	901P	*Nut, Hex 3/8-16 Cad. Plated
24	5232H	Swathstick
25	634A300	Knife Assembly
26	4569M1	Wearing Plate
27	4572M	Knife Clip
28	575X31	Knife Sections Only (Box of 25)
29	606A280	Cutter Bar and Mounting Bracket
30	5311H	Wear Plate-Rear
31	5285H	Knife Head Spacer-Rear
32	5290H	Rear Guide
33	357H	Nut, Hoglock
34	6842M	Grease Fitting
35	1544P	Washer 15/32 x 1 x 12 Ga.
36	1549P	Washer 21/32 x 1 x 12 Ga.
37	634A299A	Knife Head and Pin
38	606A252	Belt Guide Weldment-Front
39	1001P	*Lockwasher, 7/16
40	5312H	Knife Head Plate
41	5289H	Front Guide
42	5284H	Knife Head Spacer-Front
43	5247H	Wear Plate-Front
44	5254H	Front Wear Plate Base
45	5248H	Knife Back (Only)
46	5256H	Inner Runner
47	5233H	Inner Runner Divider
48	575X32	Guard Plate (Box of 25)
49	575PA53	Double Guard Assembly
50	606A273	Outer Runner Weldment
51	606A292	Swathboard Assembly
52	1517P	*Washer, Flat 7/16 x 1 x 14 Ga.
53	5394H	Nut, Gripco
54	1002P	*Lockwasher, ¼
D	3161P	*Machine Screw, Truss Hd. ¼-20 x ½
E	5480H	Rivet, Flat Head 7/32 x ¼ Bag of 3
F	6801M	Rivet, Round Head 5/32 x 13/16 Bag of
G	3027P	*Bolt, Hex 3/8-16 x 1½
H	21P	*Bolt, Hex 3/8-16 x 1¼
J	44P	*Bolt, Sq. Neck Plow 3/8-16 x 1¼
K	6800M	Rivet, Round Head 5/32 x 9/16 Bag of 35
L	251SP	*Cotter Pin, ¼ x 1¼
M	20P	*Bolt, Sq. Neck Carriage 3/8-16 x 1
N	22P	*Bolt, Sq. Neck Carriage 3/8-16 x 1½
O	6802M	Rivet CTSK #8 x 1-1/8 Bag of 20
P	30P	*Bolt, Sq. Neck Plow 3/8-16 x 1
Q	20P	*Bolt, Sq. Neck Carriage 3/8-16 x 1 Cad. Plated
R	20P	*Bolt, Sq. Neck Carriage 3/8-16 x 1 Cad. Plated
S	3114P	*Bolt, Hex ½-28 x ½

*Standard Hardware Item—Purchase Locally

repair parts

LAWN SWEEPER 37" MODEL NO. TT3042RO

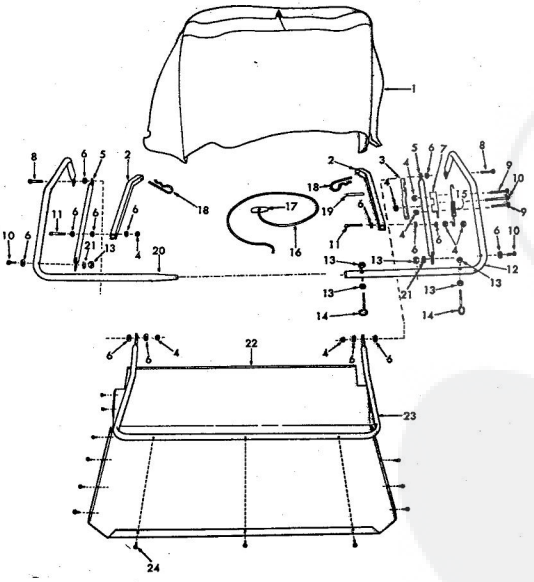

LAWN SWEEPER 37" MODEL NO. TT3042RO

KEY NO.	PART NO.	DESCRIPTION
1	5521R	Catcher Bag (Basket)
2	5332R	Support Tube
3	5333R	Latch Bar
4	1603H	Gripco Nut ¼-20
5	5330R	Pivot Tube
6	1505P	Washer 9/32 x ½ x 14 Ga.
7	5334R	Latch Bar Stop
8	3004P	Hex Bolt ¼-20 x 1
9	3005P	Hex Bolt ¼-20 x 1¼
10	3117P	Hex Bolt ¼-20 x 1½
11	3258P	Hex Bolt ¼-20 x 2½
12	5331R	Bag Tube-Upper-R.H.
13	303P	Hex Nut ¼-20
14	5337R	Eyebolt
15	5338R	Spring
16	5336R	Dump Rope
17	2377R	Dump Rope Handle
18	4940M	Retainer Spring
19	9204H	Roll Pin 3/16 x 2
20	2342R	Bag Tube-Upper-L.H.
21	1002P	Lockwasher ¼
22	2365R	Catcher Bumper
23	2341R	Bag Tube-Lower
24	5504P	Slotted Hex Hd. Self Tap Screw Type AB No. 10-32 x ¾
—	5227R	Owners Manual

PDF Complete
Your complimentary use period has ended. Thank you for using PDF Complete.
Click Here to upgrade to Unlimited Pages and Expanded Features

LAWN SWEEPER 37" MODEL NO. TT3042R0

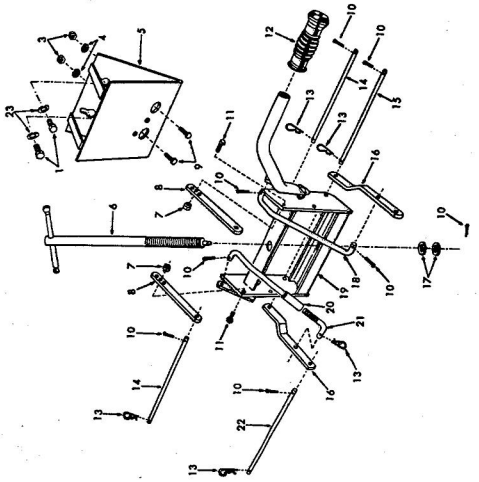

LAWN SWEEPER 37" MODEL NO. TT3042R0

KEY NO.	PART NO.	DESCRIPTION
1	3044P	Hex Bolt ½-13 x 1¼
3	501P	Hex Nut 3/8-16
4	1004P	Lockwasher 3/8
5	661A19	Lift Guide Weldment
6	661A20	Lift Screw and Handle
7	1685H	Gripco Nut 5/16-18
8	2351R	Lift Link-Upper
9	3025P	Hex Bolt 3/8-16 x 1¼
10	2506P	Cotter Pin 1/8 x 1
11	3011P	Hex Bolt 5/16-18 x 1
12	4938H	Handle Grip
13	4929H	Retainer Spring
14	2332R	Attachment Pin Upper
15	2331R	Lower Side Pin
16	2352R	Lift Link-Lower
17	1513P	Washer 13/32 x 13/16 x 16 Ga.
18	2335R	Lift Rod-R.H.
19	661A18	Lift Weldment
20	661A35	Lift Rod and Turnbuckle
21	4516R	Lift Rod-L.H. Lower
22	2333R	Attachment Pin Lower
23	1006P	Lockwasher ½

G LAWN SWEEPER 37" MODEL NO. TT3042R0

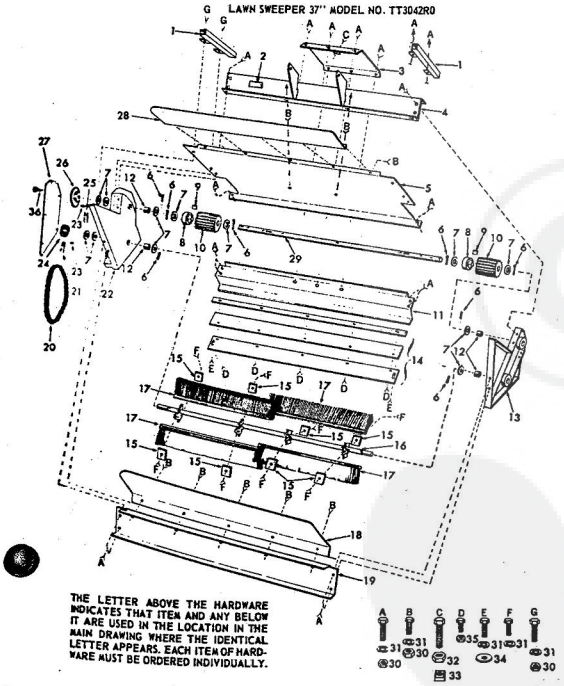

THE LETTER ABOVE THE HARDWARE INDICATES THAT ITEM AND ANY BELOW IT ARE USED IN THE LOCATION IN THE MAIN DRAWING WHERE THE IDENTICAL LETTER APPEARS. EACH ITEM OF HARDWARE MUST BE ORDERED INDIVIDUALLY.

LAWN SWEEPER 37" MODEL NO. TT3042R0

KEY NO.	PART NO.	DESCRIPTION
1	661A12	Support Tube Slide Weldment
2	----	Model Plate
3	2369R	Reinforcement Plate
4	661A14	Upper Lift Weldment
5	2361R	Main Panel
6	2507P	Cotter Pin 1/8 x 1¼
7	1552P	Washer 49/64 x 1¼ x 16 Ga.
8	4009R	Ratchet Cog
9	4007R	Ratchet Link
10	4008R	Drive Roller
11	661A15	Lower Lift Weldment
12	4156R	Bearing
13	661A17	Right End Casting and Bearings (Inc. Key No. 12)
14	661A11	Edge Strip Assembly (Inc. Key Letter E)
15	2353R	Brush Clamp Strap
16	661A21	Brush Shaft Weldment
17	4432R	Brush
18	2363R	Sweeper Throat Extension
19	2367R	Rear Channel
20	2382R	Drive Chain
21	4533P	Set Screw, Sq. Hd. C.P. ¼-20 x 3/8
22	661A16	Left Hand Castings and Bearings (Inc. Key No. 12)
23	7835M	Woodruff Key 1/8 x ½
24	2378R	Sprocket
25	4534P	Set Screw Sq. Hd. C.P. ¼-20 x 5/8
26	2379R	Sprocket
27	2362R	Casting End Plate
28	2364R	Discharge Guide Panel
29	4006R	Drive Shaft
30	503P	Hex Nut ¼
31	1002P	Lockwasher ¼
32	501P	Hex Nut 3/8-16
33	2388R	Speed Grip Nut Retainer
34	1505P	Washer 9/32 x ½ x 14 Ga.
35	4632H	Locknut No. 10-24
36	5553P	Phillips Hd. Thd. Cutting Screw Type T No. 8-32 x 5/16
A	3003P	Hex Bolt ¼-20 x ¾
B	3114P	Hex Bolt ¼-20 x ½
C	3259P	Hex Bolt 3/8-16 x 3 Full Thread
D	3218P	Hex Hd. Mach. Screw No. 10-24 x ½
E	3114P	Hex Bolt ¼-20 x ½
F	5552P	Hex Hd. Thrd. Cutting Screw ¼-20 x 5/8
G	3004P	Hex Bolt ¼-20 x 1

PDF Complete
Your complimentary use period has ended. Thank you for using PDF Complete.
Click Here to upgrade to Unlimited Pages and Expanded Features

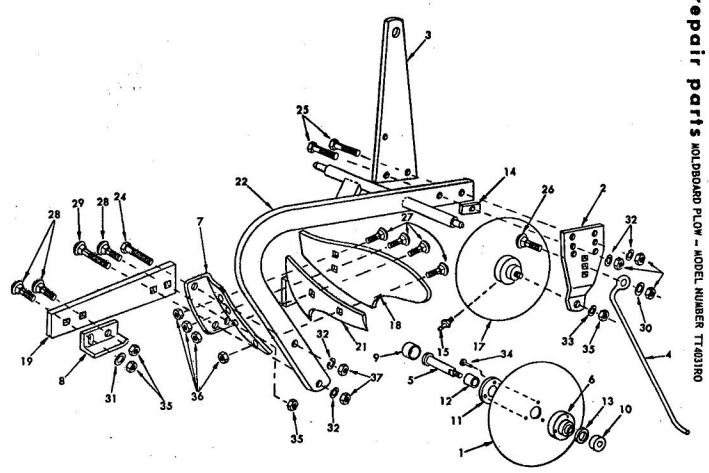

PARTS LIST

Do not use Illustration Numbers when ordering Repair Parts, always use Part Numbers.

KEY NO.	PART NO.	DESCRIPTION
1	6328E	Coulter Blade
2	1513H1	Coulter Bracket
3	1514H2	Hitch Bracket
4	6324M	Weed Rod
5	6327M	Shoulder Bolt
6	6328M	Coulter Hub
7	6335M	Frog
8	6340M	Heel
9	6341M	Hub Cap
10	6342M	Dust Cap
11	6343M	Coulter Washer
12	6348M	Bushing
13	6349M	Felt Seal
14	6488M	Spacer
15	6855M	Grease Fitting
6 & 12	575PA223	Coulter Hub and Bearing
17	575PA224	Coulter Blade, Hub and Bearings
18	575PA226	Moldboard W/Bolts
19	575PA227	Landside W/Bolts
	606A336A	Plow Bottom, Complete
21	606A335A	Share W/Bolts
22	606A107A	Beam and Hitch Bar
24	3000P	Hex Bolt ½" x 1½" - 13NC
25	3001P	Hex Bolt ½" x 1¾" - 13NC
26	25P	Bolt, Sq. Neck Carr. ½" x 1¼" - 13
27	30P	Bolt, Sq. Neck Plow 3/8" x 1" - 16
28	32P	Bolt, Sq. Neck Plow 7/16" x 1¼" - 14
29	2P	Bolt, Sq. Neck Plow ½" x 2" - 13
30	1500P	Washer, Flat 17/32" x 1-1/16" x 13 Ga.
31	1544P	Washer, Flat 15/32" x 15/16" x 16 Ga.
32	1000P	Washer, Lock ½"
33	1001P	Washer, Lock 7/16"
34	2000P	Rivets, R.H. ½" x 1¼"
35	500P	Nut, Hex 7/16" - 14
36	501P	Hex Nut 3/8 - 16
37	502P	Hex Nut ½ - 13
—	3908R	Instruction Sheet

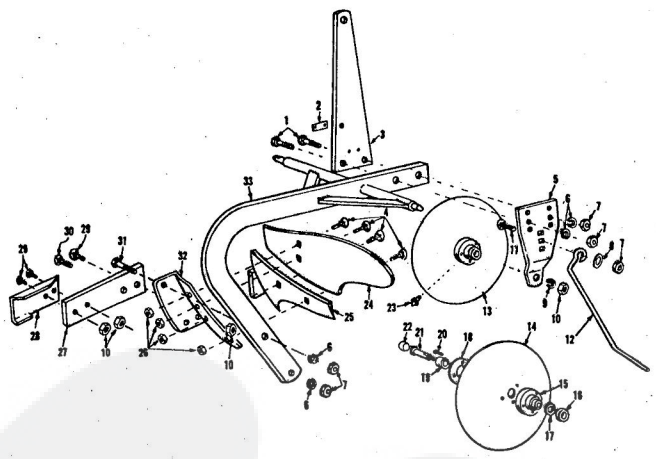

Do not use Key Numbers when ordering Repair Parts, always use Part Numbers.

KEY NO.	PART NO.	DESCRIPTION
1	3001P	Bolt, Hex ½ - 13 UNC x 1¾
2	------	Model Number Plate
3	1514H2	Hitch Bracket
4	30P	Bolt, Sq. Neck Carriage 3/8 - 16 UNC x 1
5	1513H1	Coulter Bracket
6	1000P	Lockwasher ½
7	502P	Nut, Hex ½ - 13 UNC
8	1500P	Washer, Flat 17/32 x 1-1/16 x 13 Ga.
9	1001P	Lockwasher 7/16
10	500P	Nut, Hex 7/16 - 14 UNC
11	25P	Bolt, Sq. Neck Carriage ½ - 13 UNC x 1¼
12	6324M	Weed Rod
13	575PA224	Coulter Blade, Hub and Bearings
14	6328E	Coulter Blade
15	6328M	Coulter Hub
16	6342M	Dust Cap
17	6349M	Felt Seal
18	6343M	Coulter Washer
19	6348M	Bushing
20	2000P	Rivet, Round Hd. ¼ x 1¼
21	6327M	Shoulder Bolt
22	6341M	Hub Cap
23	6855M	Grease Fitting
24	634A220	Moldboard with Bolts
25	634A224	Share with Bolts
26	501P	Nut, Hex 3/8 - 16 UNC
27	634A225	Landside, Heel and Bolts
28	8832M1	Heel
29	32P	Bolt, Sq. Neck Carriage 7/16 - 14 UNC x 1¼
30	2P	Bolt, Sq. Neck Carriage ½ - 13 UNC x 2
31	3000P	Bolt, Hex Finished ½ - 13 UNC x 1½
32	8811M	Frog
33	634A219A	Beam and Hitch Bar
---	634A223	Plow Bottom Complete
---	3915R	Instruction and Parts Book

PDF Complete
Your complimentary use period has ended. Thank you for using PDF Complete.
Click Here to upgrade to Unlimited Pages and Expanded Features

repair parts

40" DISC HARROW--MODEL NUMBER TT4241RO

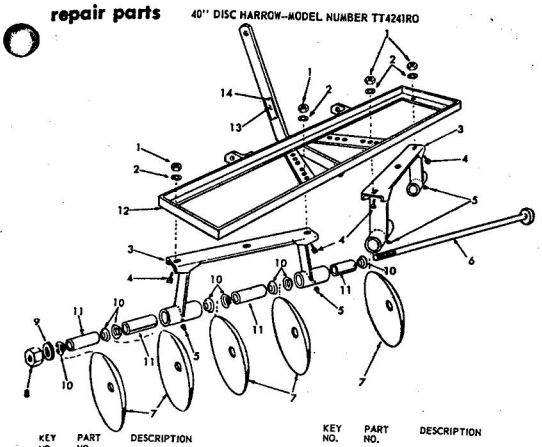

KEY NO.	PART NO.	DESCRIPTION
1	500P	Hex Nut 7/16 - 14 pltd.
2	1001P	Lockwasher, Heavy Spring 7/16"
3	606A44	Standard Support and Bearings
4	3034P	Bolt, Hex 7/16 x 1" - 14 UNC
5	6855M	Grease Fitting
6	634A627	Gang Bolt and Inner Gang Bolt Washer
7	6844M	Disc Blade
8	1187H	Lock Nut
9	6817M	Outer Gang Bolt Washer
10	6833M	Spacer Cup
11	6829M	Spacer
12	606A43	Frame
13		Model Number Plate
14	2224M	Drive Stud (For Model Number Plate)
---	5168R	Owners Manual

DRAG HARROW --- MODEL NUMBER TT4331RO

WHEN ORDERING REPAIR PARTS, ALWAYS GIVE THE FOLLOWING INFORMATION AS SHOWN LIST:

1. The PART NUMBER.
2. The PART NAME.
3. The MODEL NUMBER -- TT4331RO
4. The NAME OF ITEM -- DRAG HARROW.

Do not use the Key Number when ordering repair parts, always use the Part Number. The Model Nu be found on a plate attached to the Hitch Bar of the Frame, Key Number 1, below.

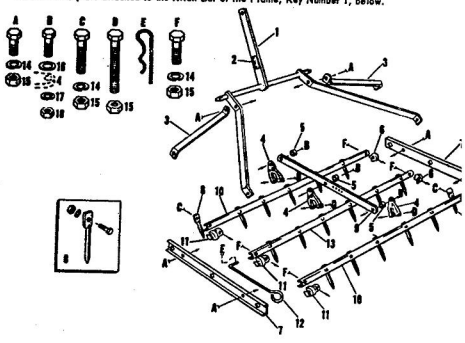

PARTS LIST

Key No.	Part No.	Description
1	606A47	Frame
2	-----	Model Number Plate
3	1384H	Front Drawbar Strap
4	8969H	Tooth Bar Lever Arm
5	4358M	Bushing
6	4352M	Tooth Bar Ferrule - R.H.
7	1387H	Side Rail
8	574PA24	Tooth, Bolt, Nut and Lock Washer
9	1385H	Drag Link
10	8967H	•Tooth Bar
11	4353M	Tooth Bar Ferrule - L.H.
12	1382H	Adjusting Link
13	8968H	•Tooth Bar Center
14	1001P	*Washer, Lock 7/16
15	500P	*Nut, Hex 7/16 ASRU-14 NC
16	1513P	Washer, Flat 13/32 x 13/16 x 16 Ga.
17	1004P	*Washer, Lock 3/8
18	501P	*Nut, Hex 3/8 ASRU-16 NC
A	3034P	Bolt, Hex Hd. 7/16 x 1 ASRU-14 NC
B	3025P	Bolt, Hex Hd. 3/8 x 1¼ ASRU-16 NC
C	3155P	Bolt, Hex Hd. 7/16 x 2¼ ASRU-14 NC
D	3040P	Bolt, Hex Hd. 7/16 x 3 ASRU-14 NC
E	4939M	Retainer Spring
--	3992R	Instruction and Parts Book
F	3035P	Bolt, Hex Hd. 7/16 x 1¼ ASRU-14 NC

•Teeth not included
*Standard Hardware Item - may be purchased locally.

repair parts

SWEEP-HOLDER WITH MIDDLEBUSTER MODEL NO. TT4431RO

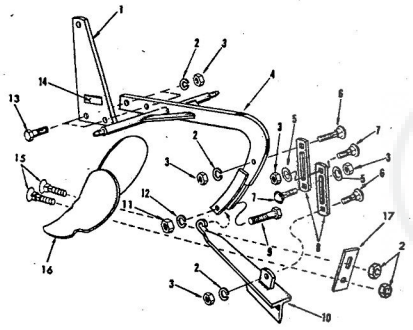

KEY NO.	PART NO.	DESCRIPTION
1	1392H	Upper Hitch Bar
2	1001P	Lockwasher 7/16
3	500P	Nut, Hex 7/16-14 UNC
4	606A94A	Frame
5	1544P	Washer, Flat 15/32 x 15/16 x 16 Ga.
6	24P	Bolt, Sq. Neck Carriage 7/16-14 x 1¼ UNC
7	23P	Bolt, Sq. Neck Carriage 7/16-14 x 1 UNC
8	7655M	Heel Brace
9	3184P	Bolt, Finished Hex Hd. ½-13 x 2¼ UNC
10	575PA271	Heel Weldment
11	502P	Nut, Hex ½-13 UNC
12	1000P	Lockwasher ½
13	3036P	Bolt, Finished Hex Hd. 7/16-14 x 1¾ UNC
14		Model Number Plate
15	33P	Plow Bolt 7/16-14 x 2½
16	8154M	10" Middlebuster
17	8149M	Washer Plate
---	3944R	Instruction and Parts Book

repair parts

CULTIVATOR WITH SWEEPS--MODEL NUMBER TT4631RO
CULTIVATOR WITH SHOVELS--MODEL NUMBER TT4831RO

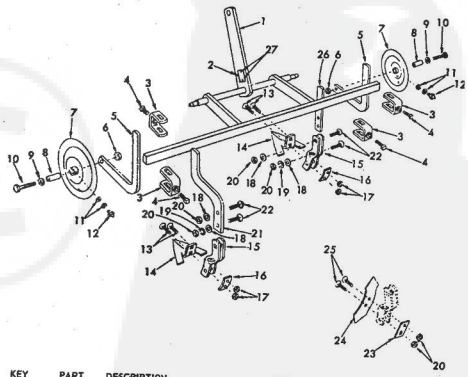

KEY NO.	PART NO.	DESCRIPTION
1	606A46	Frame
2		Model Number Plate
3	606A121	Shank Clamp with Set Screw (Includes Key No. 4)
4	4521P	Set Screw, Sq. Hd. Oval Point ⅝-20 x 1
5	1335H	Wheel Shank
6	502P	Hex Nut ½-13
7	575PA35	Gauge Wheel
8	1337H	Wheel Bearing
9	1500P	Washer 17/32 x 1-1/16 x 13 Ga.
10	3048P	Hex Bolt ½-13 x 3½
11	1899H	Washer, Flat
12	6855M	Grease Fitting
13	31P	Sq. Neck Plow Bolt 3/8-16 x 2¼
14	365H	Sweep
15	575PA272	Shank Side Assembly
16	361H	Washer Plate
17	501P	Hex Nut 3/8-16
18	1522P	Washer ⅝ x 1¼ x 14 G
19	1001P	Lock Washer 7/16
20	500P	Hex Nut 7/16-14
21	1334H	Shank, Offset
22	29P	Sq. Neck Carriage Bol 7/16-14 x 1½ Short
23	8149M	Washer Plate
24	8153M	Double Point Shovel
25	33P	Sq. Neck Plow Bolt 7/16-14 x 2½
26	1333H	Shank, Straight
27	2224M	Drive Stud (For Model Number Plate)
----	3949R	Owners Manual

PDF Complete
Your complimentary use period has ended. Thank you for using PDF Complete.
Click Here to upgrade to Unlimited Pages and Expanded Features

repair parts

LEVELER BLADE--MODEL NUMBER TT4931R0

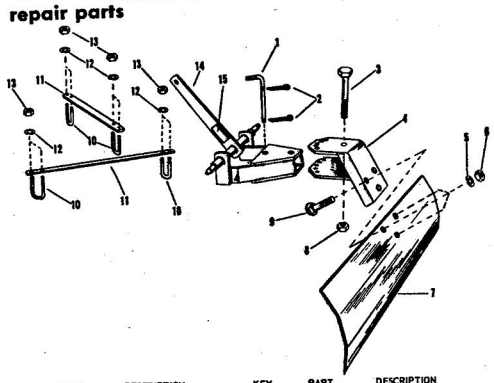

KEY NO.	PART NO.	DESCRIPTION
1	5418H	Quadrant Pin
2	2506P	*Cotter Pin 1/8 x 1
3	3167P	*Bolt, Hex Finished 5/8-11 UNC x 4
4	606A300	Quadrant Plate Upper and Lower
5	1000P	*Washer, Lock ½
6	502P	*Nut, Hex ½-13 UNC
7	5426H	Blade
8	4764H	Lock Nut
9	27P	*Bolt, Sq. Neck Carriage ½-13 UNC x 2½
10	8975R	U-Bolt
11	5421H	Hitch Brace
12	1004P	*Washer, Lock 3/8
13	501P	*Nut, Hex ASF 3/8-16 UNC
14	634A55	Frame Weldment
15	----------	Model Number Plate
---	3929R	Owners Manual

*Standard Hardware Item -- may be purchased locally

repair parts

ROPER ROTO-TILLER ATTACHMENT--MODEL NO. TT5031R1

ENGINE AND TINES

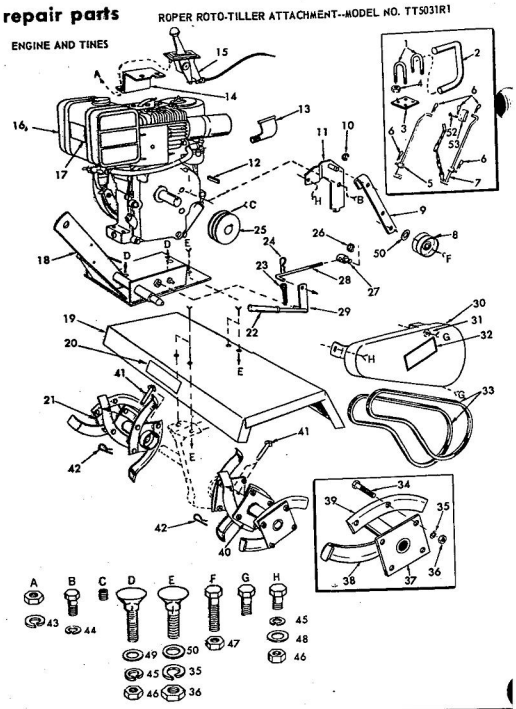

ROPER ROTO-TILLER ATTACHMENT--MODEL NO. TT5031R1

ENGINE AND TINES

KEY NO.	PART NO.	DESCRIPTION
1	6678H	U Bolt
2	3457R	Lift Handle Extension
3	6665H	U Bolt Plate
4	545P	Gripco Crown Locknut 3/8-16
5	634A702	Lift Link & Stop L.H.
6	4939M	Retainer Spring
7	634A707	Lift Link and Chain-R.H.
8	3475R	Idler Pulley
9	9401H	Idler Arm
10	5015P	E-Ring
11	624A38	Idler Arm Support & Pivot
12	4914H	Square Key ¼ sq.
13	4012P	Street Elbow-Std. 90°
14	3468R	Throttle Control Bracket
15	3473R	Throttle Control
16	190402	Engine 8 H.P. Briggs and Stratton Type No. 0780-01
17	----	Scotchcal
18	634A561	Hitch Plate Weldment
19	3467R	Tine Shield
20	----	Scotchcal
21	634A557	Tine Plate & Hub R.H. (Less Tines)
22	4379H	Handle Grip
23	2501P	Cotter Pin 5/32 x 1
24	4497H	Retainer Spring
25	3471R	Engine Sheave
26	6683H	E-Ring
27	6656H	Adjusting Pin
28	6652H	Belt Retainer Link
29	634A60	Lever and Arm
30	634A560	Belt Guard & Brackets
31	1556P	Washer 13/32 x 7/8 x 14 Ga.
32	----	Scotchcal
33	634A563	Set of 2 Matched V-Belts
34	3091P	Hex Bolt 3/8-16 x 1 H.T. Grade 5
35	1004P	Lockwasher 3/8
36	501P	Hex Nut 3/8-16
37	634A558	Tine Shaft-Outer & Plate
38	6712H	Tine L.H.
39	6713H	Tine R.H.
40	634A556	Tine Plate & Hub L.H. (Less Tines)
41	4929H	Drilled Pan Hd. Rivet 3/8 x 1¾
42	3146R	Retainer Spring
43	1002P	Lockwasher ¼
44	1000P	Lockwasher ½
45	1003P	Lockwasher 5/16
46	504P	Hex Nut 5/16-18
47	508P	Hex Jam Nut 3/8-16
48	1537P	Washer 11/32 x 11/16 x 16 Ga.
49	1511P	Washer 3/8 x 7/8 x 14 Ga.
50	1556P	Washer 13/32 x 7/8 x 14 Ga.
51	1517P	Washer 7/16 x 1 x 14 Ga.
52	6991A	Drilled R.H. Rivet
53	6881R	Clevis
A	503P	Hex Nut ½-20
B	3234P	Hex Bolt ½-20 x ¾
C	4531P	Hex Socket Hdless. Set Screw 5/16-18 x 3/8
D	56P	Plow Bolt 5/16-18 x 2
E	44P	Plow Bolt 3/8-16 x 1¼
F	3028P	Hex Bolt 3/8-16 x 1¾
G	6024P	Hex Bolt w/ext. Tooth Lockwasher 5/16-18 x ¾
H	3010P	Hex Bolt 5/16-18 x ¾
---	6802R	Owners Manual

ROPER ROTO-TILLER ATTACHMENT--MODEL NO. TT5031R1

TRANSMISSION AND GAUGE WHEELS

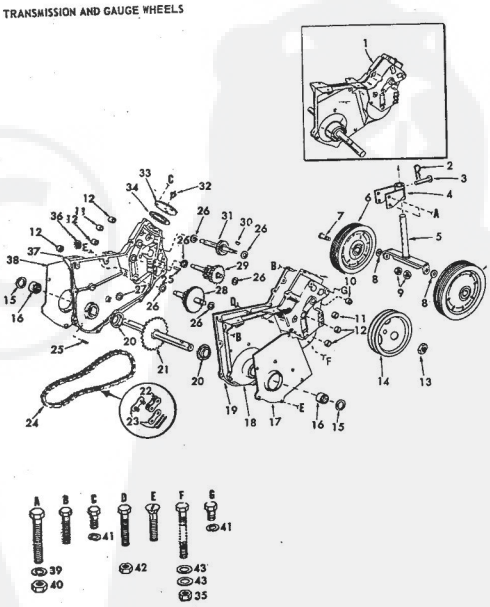

PDF Complete
Your complimentary use period has ended. Thank you for using PDF Complete.
Click Here to upgrade to Unlimited Pages and Expanded Features

ROPER ROTO-TILLER ATTACHMENT--MODEL NO. TT5031R1

TRANSMISSION AND GAUGE WHEELS

KEY NO.	PART NO.	DESCRIPTION
1	634A562	Transmission
2	4939M	Retainer Spring
3	4929H	Drilled Pan Head Rivet 3/8 x ¾
4	634A61	Gauge Wheel Sleeve and Brackets
5	634A559	Gauge Wheel Adjusting Shaft and Brackets
6	3148R	Wheel
7	4898H	Shoulder Bolt
8	1557P	Washer 13/32 x 13/16 x 11 Ga.
9	514P	Lock Nut
10	3136R	Needle Bearing
11	6677H	Needle Bearing Shell
12	4895H	Needle Bearing
13	9204H	Hex Nut ½-20
14	3472R	Input Sheave
15	4910H	Oil Seal
16	4896H	Needle Bearing
17	4877H1	Gear Case Shield L.H.
18	624A56	Gear Case and Bearings L.H. Half
19	2601R	Gasket
20	4870H	Thrust Cap
21	634A555	Tine Shaft and Sprocket
22	4950H	Roller Link
23	4949H	Connecting Link
24	2600R	Roller Chain
25	9880M	Dowel Pin
26	1370H	Thrust Bearing Race
27	4912H	Gasket
28	634A59	2nd Reduction Shaft and Gears
29	634A58	1st Reduction Shaft and Gears
30	9858M1	Woodruff Key 3/16 x 5/8
31	634A57	Input Shaft and Pinion
32	5853H	Relief Valve
33	6672H	Gear Shift Cover
34	4913H	Gasket
35	1685H	Lock Nut 5/16-18
36	4002P	Pipe Plug ½ 14 N.P.T.
37	624A57	Gear Case and Bearings R.H. Half
38	4878H1	Gear Case Shield R.H.
39	1004P	Lockwasher 3/8
40	501P	Hex Nut 3/8-16
41	1003P	Lockwasher 5/16
42	504P	Hex Nut 5/16-18
43	7850H	Spacer
A	3030P	Hex Bolt 3/8-16 x 2¼
B	5586P	Hex Hd. Roll Lok Tapping Screw 5/16-18 x 1½
C	3010P	Hex Bolt 5/16-18 x ¾
D	3015P	Hex Bolt 5/16-18 x 2
E	5585P	Flat Hd. Slotted Roll Lok Tapping Screw 5/16-18 x 1½
F	3018P	Hex Bolt 5/16-18 x 6
G	3008P	Hex Bolt 5/16-18 x ½

BRIGGS AND STRATTON ENGINE MODEL NO. 190402 - TYPE NO. 0780-01

STARTER AND MAGNETO FLYWHEEL

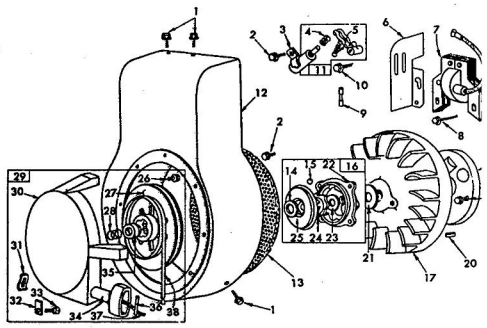

KEY NO.	PART NO.	DESCRIPTION
1	93158	Screw-Sem.
2	93042	Screw-Sem.
3	220477	Clamp-Condenser
4	260374	Spring-Connector
5	26018	Spring-Breaker Arm
6	221760	Guide-Air
7	298968	Armature Assembly
8	93381	Screw-Armature Mtg. Sem
9	65704	Plunger-Breaker Point
10	93381	Screw-Breaker Arm Mounting Sem
11	294628	Breaker points and condenser set. Note: 299061 ignition kit includes 294628 point set 65704 plunger and 61760 key-flywheel.
12	299853	Housing-Blower
13	221796	Screen-Rewind Starter
14	68238	Washer-Ratchet Sealing
15	63770	Ball-Clutch
16	298798	Clutch Assy.-Rewind Starter
17	298260	Flywheel-Magneto
18	93014	Screw-Sem
19	222117	Cover-Breaker Point
20	61760	Key-Flywheel
21	220865	Washer-Spring
22	221383	Housing-Rewind Start Clutch
23	66718	Washer-Starter Clutch Thrust
24	298799	Rachet-Rewind Starter Clutch
25	221653	Washer-Retainer
26	93067	Screw-Rewind Starter Housing Mtg. Sem.
27	295871	Pulley-Rewind Starter
28	260414	Spring-Rachet
29	293001	Starter Assy.-Rewind
30	295272	Housing-Rewind Start
31	221014	Anchor-Spring
32	68848	Bumper-Starter Pulley
33	93254	Screw-Pulley Bumper Mounting
34	66728	Grip-Starter Rope
35	230543	Adapter-Rachet Spring
36	230228	Pin-Starter Grip
37	66564	Rope-Rewind Starter
38	294303	Spring-Rewind Starter

BRIGGS AND STRATTON ENGINE MODEL NO. 190402 - TYPE NO. 0780-01

ENGINE CARBURETOR AND AIR CLEANER

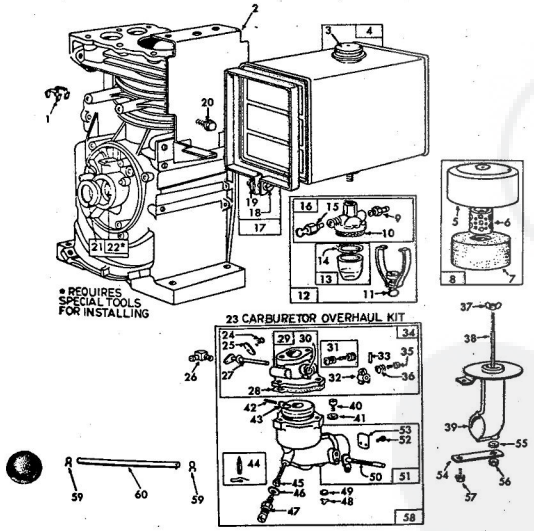

BRIGGS AND STRATTON ENGINE MODEL NO. 190402 - TYPE NO. 0780-01

ENGINE CARBURETOR AND AIR CLEANER

KEY NO.	PART NO.	DESCRIPTION
1	221907	Clip-Wire
2	221935	Bracket-Fuel Tank
3	69221	Cap-Fuel Tank
4	290816	Tank Assy.-Fuel
5	221468	Cover-Air Cleaner
6	280001	Cap-Air Cleaner
7	270093	Element-Air Cleaner
8	390400	Cleaner Assy.-Air
9	230318	Connector-Fuel Pipe
10	22547	Screen-Fuel Filter
11	99665	Yoke-Fuel Filter
12	295984	Filter Assembly-Fuel
13	298683	Bowl-Fuel Filter
14	*68477	Gasket-Fuel Filter
15	295913	Valve-Fuel Shut-off
16	296005	Cover Assembly-Fuel
17	291367	Strap Assy.-Fuel Tank
18	91257	Screw-Mach. Fil. Hd. ¼-20 x 1½
19	90970	Nut-Square ¼-20
20	93535	Screw-Sems
21	294606	Seal-Oil
22	295962	Bushing-Cylinder Note: Requires special tools for installation
23	295938	Carburetor Over Haul Kit
24	93038	Screw-Throttle and Choke Valve Mtg. Sem
25	62940	Valve-Throttle
26	67218	Connector-Fuel Pipe
27	298826	Shaft and Lever-Throttle
28	† 27918	Gasket-Carburetor Body
29	390503	Body-Upper Carburetor
30	23108	Bushing-Throttle Shaft
31	† 292681	Valve Assembly-Carburetor Idle
32	61967	Stop-Throttle
33	93043	Pin-Throttle Stop
34	390404	Body Assembly-Upper Carburetor
35	91920	Screw-Mach. Fil. Hd. #8-32 x 5/8
36	26157	Spring-Throttle
37	93453	Nut-Wing
38	230768	Stud-Air Cleaner
39	390311	Pipe Assy.-Air Cleaner
40	90746	Screw-Mach., Fil. Hd. #10-32 x 5/8
41	92290	Washer-Lock-No. 10 x 1/16 x 3/64
42	† 230896	Pin-Float Hinge
43	99333	Float-Carburetor
44	299096	Valve-Fuel Inlet
45	† 390395	Nozzle-Carburetor
46	† 68667	Gasket-Nozzle
47	† 99525	Valve Assembly-Needle
48	220521	Retainer-Carburetor Drain Filter
49	27590	Filter-Carburetor Drain
50	390669	Shaft and Lever-Choke
51	390781	Body Assy.-Lever Carburetor
52	93038	Screw-Throttle and Choke Valve Mtg. Sem
53	62872	Valve-Choke
54	222150	Strap-Air Cleaner Pipe
55	66648	Gasket-Air Cleaner Stud
56	92129	Nut-Hex ¼-28
57	93158	Screw-Sem
58	390680	Carburetor Assy.
59	93053	Clamp-Fuel Pipe
60	299942	Pipe-Fuel

*Included in gasket set part no. 299577

† Included in carburetor overhaul kit part no. 295938

PDF Complete
Your complimentary use period has ended. Thank you for using PDF Complete.
Click Here to upgrade to Unlimited Pages and Expanded Features

BRIGGS AND STRATTON ENGINE MODEL NO. 190402 - TYPE NO. 0780-01

ENGINE

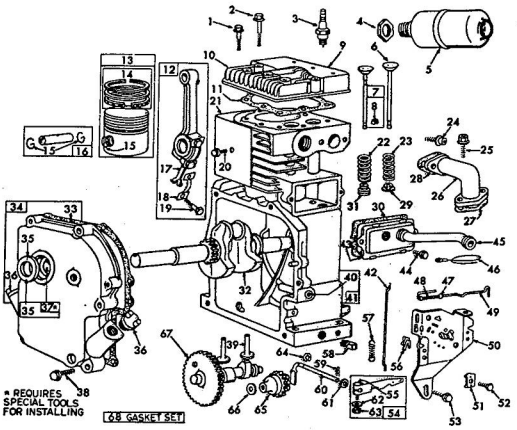

KEY NO.	PART NO.	DESCRIPTION
1	93210	Screw-Cylinder Head (2-9/32 long)
2	93211	Screw-Cylinder Head (2-9/16 long)
3	298809	Plug-Spark Note: Spark plugs 298809 use ignition cable terminal no. 221798
4	91242	Locknut- Muffler
5	390249	Muffler-Exhaust
6	261055	Valve-Intake
7	390419	Valve-Exhaust
8	93630	Retainer-Exhaust Valve Rotocoil (2)
9	221901	Cover-Cylinder Head
10	211778	Head-Cylinder
11	* 270430	Gasket-Cylinder Head
12	390401	Rod Assy.-Connecting Note: For connecting rod with .020" undersize crankpin bore-order no. 390773
13	390347	Piston Assembly Std.
	390348	Piston Assy. .010" O.S.
	390349	Piston Assy. .020" O.S.
	390350	Piston Assy. .030" O.S.
		Piston ring sets
		Note: For chrome ring set standard size order no. 299743
14	299569	Ring Set-Piston-std. Consists of 211637 piston ring comp. top std. 211636 piston ring comp. center std. 211635 piston ring oil std.
	299570	Ring Set-Piston-.010" O.S. Consists of 211649 piston ring comp. top .010" O.S. 211650 piston ring comp. center .010" O.S. 211651 piston ring oil .010" O.S.
	299572	Ring Set-Piston-020" O.S. Consists of 211657 piston ring comp. top .030" O.S. 211658 piston ring comp. center .030" O.S. 211659 piston ring oil .030" O.S.
15	68546	Lock-Piston Pin
16	295840	Pin Assy.-Piston-Std.
	295841	Pin Assy.-Piston .005" O.S.
17	222113	Dipper-Connecting Rod
18	222114	Lock-Conn. Rod Screw
19	92659	Screw-Connecting Rod
20	93163	Screw-Cylinder Shield Mtg. Sem.
21	221898	Shield-Cylinder
22	26828	Spring-Exhaust Val
23	65905	Spring-Intake Valve
24	93208	Screw-Intake Elbow Mounting Sem.
25	93128	Screw-Carburetor Mounting Sem.
26	211812	Elbow-Intake
27	* 270684	Gasket-Intake Elbo
28	* 27828	Gasket-Intake Elbo
29	221596	Retainer-Intake Val
30	* 27803	Gasket-Valve Cover
31	292260	Rotocoil-Exhaust V
32	261077	Crankshaft
33	* 27750	Gasket-Crankcase c 1/64" thick
	* 27876	Gasket- Crankcase .005" thick
	* 27877	Gasket-Crankcase c .009" thick
34	299167	Cover Assy.-Cranke
35	298423	Seal-Oil
36	66768	Plug-Oil Filler
37	295964	Bushing-Crankcase Note: Requires spec tools for installation
38	93585	Screw-Crankcase co mounting sem.
39	260933	Tappet-Valve
40	220843	Bushing-Governor Sh
41	390399	Cylinder Assembly
42	260872	Link-Governor
43	390321	Breather Assembly
44	93536	Screw-Sem
45	67068	Tube-Breather
46	299500	Wire-Ground
47	221198	Washer-Choke Link
48	261119	Spring-Choke Link
49	261122	Link-Choke
50	390670	Plate-Governor Contr
51	221535	Clamp-Casing
52	93496	Screw-Sem.
53	93535	Screw-Sem.
54	299165	Lever Assy.-Governo
55	92613	Bolt-Governor Lever
56	297472	Switch-Stop
57	261194	Spring-Governor
58	91084	Plug-Oil Drain
59	93306	Cotter-Hair Pin
60	230842	Crank-Governor
61	221559	Washer-Spacer
62	220680	Washer
63	90356	Nut-Hex 10-24
64	93307	Retainer-E-Ring
65	297656	Gear-Governor
66	221551	Washer-Thrust
67	210728	Gear-Cam
68	299577	Gasket Set

* Included in gasket set Part no. 299577

BRIGGS AND STRATTON ENGINE MODEL NO. 190402 - TYPE NO. 0780-01

ENGINE

KEY NO.	PART NO.	DESCRIPTION
22	26828	Spring-Exhaust Val
23	65905	Spring-Intake Valve
24	93208	Screw-Intake Elbow Mounting Sem.
25	93128	Screw-Carburetor Mounting Sem.
26	211812	Elbow-Intake
27	* 270684	Gasket-Intake Elbo
28	* 27828	Gasket-Intake Elbo
29	221596	Retainer-Intake Val
30	* 27803	Gasket-Valve Cover
31	292260	Rotocoil-Exhaust V
32	261077	Crankshaft
33	* 27750	Gasket-Crankcase c 1/64" thick
	* 27876	Gasket- Crankcase .005" thick
	* 27877	Gasket-Crankcase c .009" thick
34	299167	Cover Assy.-Cranke
35	298423	Seal-Oil
36	66768	Plug-Oil Filler
37	295964	Bushing-Crankcase Note: Requires spec tools for installation
38	93585	Screw-Crankcase co mounting sem.
39	260933	Tappet-Valve
40	220843	Bushing-Governor Sh
41	390399	Cylinder Assembly
42	260872	Link-Governor
43	390321	Breather Assembly
44	93536	Screw-Sem
45	67068	Tube-Breather
46	299500	Wire-Ground
47	221198	Washer-Choke Link
48	261119	Spring-Choke Link
49	261122	Link-Choke
50	390670	Plate-Governor Contr
51	221535	Clamp-Casing
52	93496	Screw-Sem.
53	93535	Screw-Sem.
54	299165	Lever Assy.-Governo
55	92613	Bolt-Governor Lever
56	297472	Switch-Stop
57	261194	Spring-Governor
58	91084	Plug-Oil Drain
59	93306	Cotter-Hair Pin
60	230842	Crank-Governor
61	221559	Washer-Spacer
62	220680	Washer
63	90356	Nut-Hex 10-24
64	93307	Retainer-E-Ring
65	297656	Gear-Governor
66	221551	Washer-Thrust
67	210728	Gear-Cam
68	299577	Gasket Set

* Included in gasket set Part no. 299577

repair parts ROPER ROTO-TILLER ATTACHMENT—MODEL NO. TT5061R0

ENGINE AND TINES

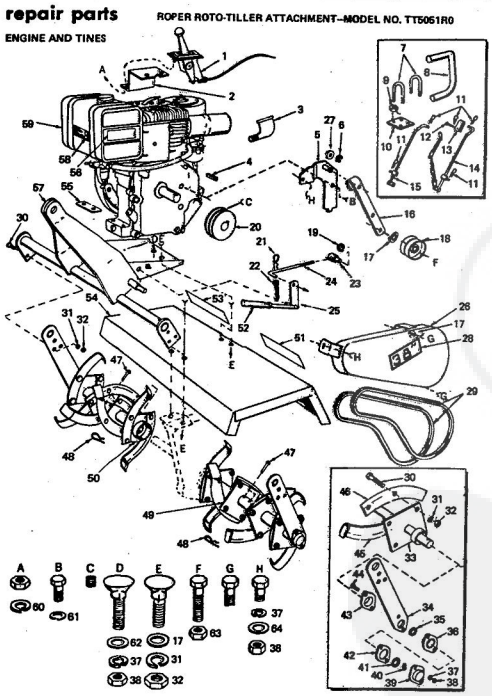

ROPER ROTO-TILLER ATTACHMENT—MODEL NO. TT5061R0

ENGINE AND TINES

KEY NO.	PART NO.	DESCRIPTION
1	7093R	Throttle Control
2	3468R	Throttle Control Bracket
3	4012P	Street Elbow—Std. 90°
4	4914H	Square Key, 1/4 sq.
5	624A38	Idler Arm Support & Pivot
6	5015P	E-Ring
7	6678H	U-Bolt
8	3467R	Lift Handle Extension
9	545P	Gripco Crown Locknut, 3/8–16
10	6665H	U-Bolt Plate
11	4939M	Retainer Spring
12	6991A	Drilled R.H. Rivet
13	6881R	Clevis
14	634A707	Lift Link and Chain—R.H.
15	634A702	Lift Link & Stop—L.H.
16	9401H	Idler Arm
17	1556P	Washer, 13/32 x 7/8 x 14 Ga.
18	3475R	Idler Pulley
19	6683H	E-Ring
20	3471R	Engine Sheave
21	4497H	Retainer Spring
22	2501P	Cotter Pin, 5/32 x 1
23	6656H	Adjusting Pin
24	6852H	Belt Retainer Link
25	634A60	Lever and Arm
26	634A718	Belt Guard & Brackets
27	1518P	Washer 16/32 x 11/16 x 16 Ga.
28	7082R	Scotchcal
29	634A563	Set of 2 Matched V-Belts
30	3091P	Hex Bolt, 3/8–16 x 1, H.T. Grade 5
31	1004P	Lockwasher, 3/8
32	501P	Hex Nut, 3/8–16
33	634A716	Tine Shaft—Outer, Plate & Shield
34	7050R	End Plate, Outer
35	7067R	Oil Seal
36	634A719	Outer Bearing & Seal
37	1003P	Lockwasher, 5/16
38	504P	Hex Nut, 5/16–18
39	634A720	Dust Cap & Grease Fitting
40	1306H	Roll Pin, 1/4 x 1-1/2
41	7396H	Thrust Bearing Race
42	7094R	Gasket
43	7055R	Dust Shield
44	3135P	Hex Bolt, 5/16–18 x 1-1/4, Grade 5
45	6712H	Tine, L.H.
46	6713H	Tine, R.H.
47	4929H	Drilled Pan Hd. Rivet, 3/8 x 1-3/4
48	3146R	Retainer Spring
49	634A556	Tine Plate & Hub, L.H. (Less Tines)
50	634A557	Tine Plate & Hub, R.H. (Less Tines & Outer Tine Pl
51	7083R	Scotchcal
52	4379H	Handle Grip
53	7084R	Scotchcal
54	3467R	Tine Shield
55	7061R	Engine Base Strap
56	7034R	Scotchcal, 8 H.P.
57	634A717	Hitch Plate Weldment
58	7081R	Scotchcal, Roto-Tiller
59	634A714	Engine, 8 H.P., Briggs & Stratton 190402
60	1002P	Lockwasher, 1/4
61	1000P	Lockwasher, 1/2
62	1511P	Washer, 3/8 x 7/8 x 14 Ga.
63	508P	Hex Jam Nut, 3/8–16
64	1537P	Washer, 11/32 x 11/16 x 16 Ga.
A	503P	Hex Nut, 1/4–20
B	3234P	Hex Bolt, 1/2–20 x 3/4
C	4531P	Hex Socket Hdless. Set Screw, 5/16–18 x 3/8
D	56P	Plow Bolt, 5/16–18 x 2
E	44P	Plow Bolt, 3/8–16 x 1-1/4
F	3028P	Hex Bolt, 3/8–16 x 1-3/4
G	6024P	Hex Bolt w/Ext. Tooth Lockwasher, 5/16–18 x 3/4
H	3010P	Hex Bolt, 5/16–18 x 3/4
—	7089R	Owner's Manual

PDF Complete
Your complimentary use period has ended. Thank you for using PDF Complete.
Click Here to upgrade to Unlimited Pages and Expanded Features

ROPER ROTO-TILLER ATTACHMENT—MODEL NO. TT5061RO

TRANSMISSION AND GAUGE WHEELS

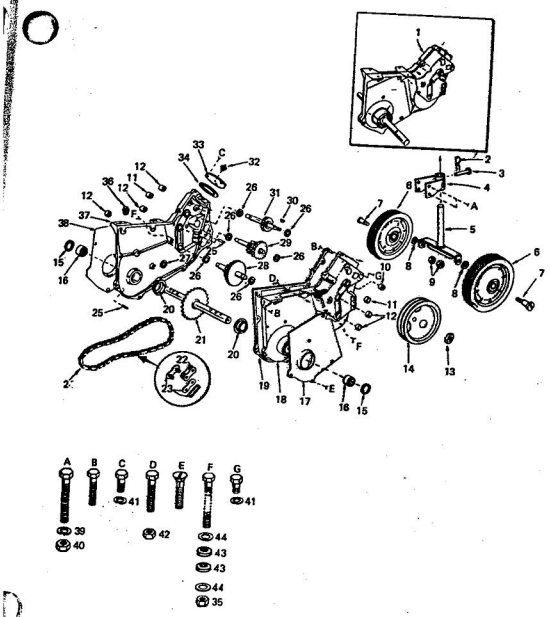

KEY NO.	PART NO.	DESCRIPTION
1	634A562	Transmission
2	4939M	Retainer Spring
3	4929H	Drilled Pan Head Rivet, 3/8 x 3/4
4	634A61	Gauge Wheel Sleeve and Brackets
5	634A559	Gauge Wheel Adjusting Shaft and Brackets
6	3148R	Wheel
7	4898H	Shoulder Bolt
8	1557P	Washer, 13/32 x 13/16 x 11 Ga.
9	514P	Locknut
10	3136R	Needle Bearing
11	8677H	Needle Bearing Shell
12	4895H	Needle Bearing
13	9204H	Hex Nut 1/2-20
14	3472R	Input Sheave
15	4910H	Oil Seal
16	3039R	Needle Bearing
17	4877H1	Gear Case Shield, L.H.
18	624A56	Gear Case and Bearings, L.H. Half
19	2801R	Gasket
20	4870H	Thrust Cap
21	634A555	Tine Shaft and Sprocket
22	4950H	Roller Link
23	4949H	Connecting Link
24	2600R	Roller Chain
25	9880M	Dowel Pin
26	1370H	Thrust Bearing Race
27	4912H	Gasket
28	634A59	2nd Reduction Shaft and Gear
29	634A58	1st Reduction Shaft and Gear
30	9858M1	Woodruff Key, 3/16 x 5/8
31	634A57	Input Shaft and Pinion
32	5865H	Relief Valve
33	6672H	Gear Shift Cover
34	4913H	Gasket
35	1685H	Locknut 5/16-18
36	4002P	Pipe Plug, 1/2 14 M.P.T.
37	624A57	Gear Case and Bearings, R.H. Half
38	4878H1	Gear Case Shield, R.H.
39	1004P	Lockwasher, 3/8
40	501P	Hex Nut, 3/8-16
41	1003P	Lockwasher, 5/16
42	504P	Hex Nut, 5/16-18
43	7850R	Spacer
44	1537P	Washer 11/32 x 11/16 x 16 Ga.
A	3030P	Hex Bolt, 3/8-16 x 2-1/4
B	5586P	Hex Hd. Roll Lok Tapping Screw, 5/16-18 x 1-1/2
C	3010P	Hex Bolt, 5/16-18 x 3/4
D	3015P	Hex Bolt, 5/16-28 x 2
E	5585P	Flat Hd. Slotted Roll Lok Tapping Screw, 5/16-18 x 1-1/
F	3018P	Hex Bolt, 5/16-18 x 6
G	3008P	Hex Bolt, 5/16-18 x 1/2

REPAIR PARTS:

ROTO-TILLER ATTACHMENT--MODEL NO. TT517AR

ENGINE AND TINES

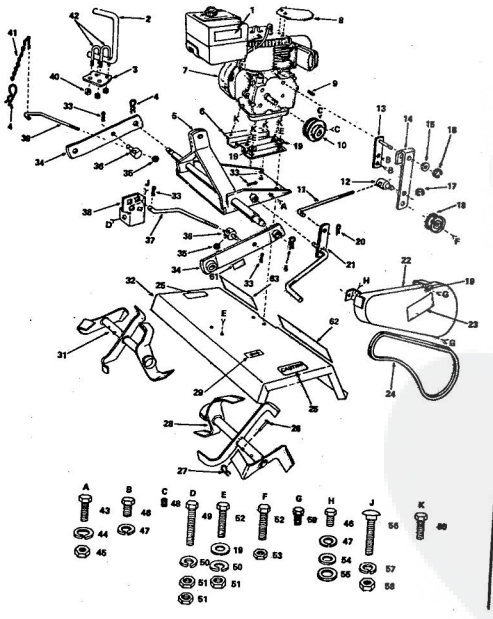

ROTO-TILLER ATTACHMENT--MODEL NO. TT517AR

ENGINE AND TINES

KEY NO.	PART NO.	DESCRIPTION
1	9689R	Decal
2	3457R	Lift Handle - Extension
3	6686M	U-Bolt Plate
4	4940M	Retainer Spring
5	626A400	Hitch Channel Weldment
6	8215R	Engine Base
7	H60-75451K	Engine 6 H.P. (Order from your local Tecumseh Service Dealer)
8	8213R	Muffler Shield
9	4914H	Square Key 1/4 x 1 - 1/4
10	8249R	Engine Sheave
11	6862H	Belt Tightener Link
12	6858H	Adjusting Pin
13	624A12	Idler Support Plate and Pivot
14	9401H	Idler Arm
15	1518P	*Washer 15/32 x 11/16 x 16 Ga.
16	5015P	E-Ring
17	6683H	E-Ring
18	4933H	Idler Pulley
19	1559P	*Washer 13/32 x 7/8 x 14 Ga.
20	4497H	Retainer Spring
21	626A430	Lever and Arm
22	624A13A	Belt Guard and Supports
23	9641R	Decal
24	8225R	V-Belt
25	8216R	Caution Decal
26	4929H	Drilled Pan Hd. Rivet 3/8 x 1 - 3/4
27	3146R	Retainer Spring
28	626A401	Tine Weldment - L.H.
29	8212R	"On - Off" Decal
31	626A402	Tine Weldment - R.H.
32	8224R	Tine Shield
33	2501P	*Cotter Pin 5/32 x 1
34	626A399	Lower Hitch Bar and Bushings
35	9204H	Locknut 1/2 - 20 UNF
36	8214R	Lift Link Swivel
37	7795R	Lift Link - L.H.
38	9773R	Lever Stop Bracket
39	7798R	Lift Link - R.H.
40	545P	Gripco Crown Locknut 3/8 - 16 UNC
41	8232R	Chain and Cotter Pin
42	6678H	U-Bolt
43	3004P	*Hex Bolt 1/4 - 20 x 1
44	1002P	*Lockwasher 1/4
45	503P	*Hex Nut 1/4 - 20 UNC
46	3054P	*Hex Bolt 5/16 - 24 x 3/4
47	1003P	*Lockwasher 5/16
48	4537P	Forged Socket Headless Set Screw 5/16 - 18 x 3/8
49	3288P	*Hex Bolt 3/8 - 16 x 2 Full Thread
50	1004P	*Lockwasher 3/8
51	501P	*Hex Nut 3/8 - 16 UNC
52	3027P	*Hex Bolt 3/8 - 16 x 1 - 1/2
53	508P	*Hex Jam Nut 3/8 - 16 UNC
54	1537P	*Washer 11/32 x 11/16 x 16 Ga.
55	1557P	*Washer 13/32 x 13/16 x 11 Ga.
56	60P	*Carriage Bolt Sq. Neck Short Shoulder 1/2 - 13 x 1
57	1000P	*Lockwasher 1/2
58	502P	*Hex Nut 1/2 - 13 UNC
59	6024P	Hex Bolt with Sems Ext. Lockwasher 5/16 - 18 UNC x 3/4
60	3323P	Hex Hd. Cap Screw 5/16 - 18 x 13/16
61	6798H	Decal
62	9642R	Decal - Roto-Tiller
63	9643R	Decal - Roper
—	9646R	Owners Manual

*STANDARD HARDWARE–PURCHASE LOCALLY

PDF Complete
Your complimentary use period has ended. Thank you for using PDF Complete.
Click Here to upgrade to Unlimited Pages and Expanded Features

ROTO-TILLER ATTACHMENT–MODEL NO. TT517AR

TRANSMISSION AND GAUGE WHEELS

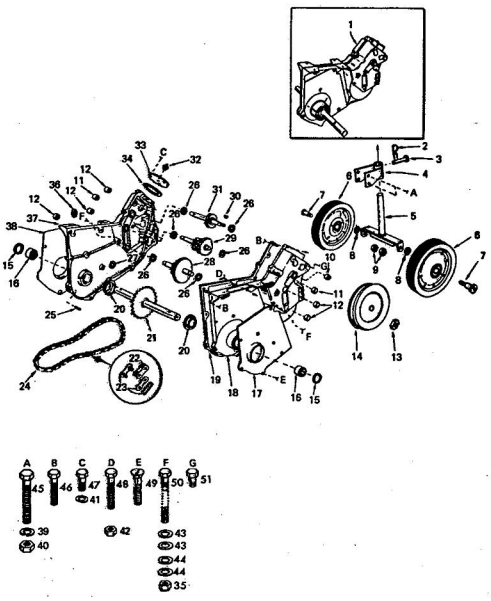

ROTO-TILLER ATTACHMENT–MODEL NO. TT517AR

TRANSMISSION AND GAUGE WHEELS

KEY NO.	PART NO.	DESCRIPTION
1	634A562	Transmission
2	4639M	Retainer Spring
3	4929H	Drilled Pan Head Rivet 3/8 x 1 - 3/4
4	634A61	Gauge Wheel Sleeve and Brackets
5	634A559	Gauge Wheel Adjusting Shaft and Bracket
6	3148R	Wheel
7	4898H	Shoulder Bolt
8	1557P	*Washer 13/32 x 13/16 x 11 Ga.
9	514P	*Locknut 3/8 - 16 UNC Nylok
10	3136R	Needle Bearing
11	6577H	Needle Bearing Shell
12	4896H	Needle Bearing
13	9204H	Lock Nut 1/2 - 20 UNF
14	4932H	Input Sheave
15	4910H	Oil Seal
16	3039R	Needle Bearing
17	4877H1	Gear Case Shield L.H.
18	624A58	Gear Case and Bearings L.H. Half (Inc. Key No's. 10, 12, 16 & 20)
19	2801R	Gasket
20	4870H	Thrust Cap
21	634A555	Tine Shaft and Sprocket
22	4950H	Roller Link
23	4949H	Connecting Link
24	2600R	Roller Chain
26	1370H	Thrust Bearing Race
27	4912H	Gasket
28	634A59	2nd Reduction Shaft and Gears
29	634A58	1st Reduction Shaft and Gears
30	9858M1	Woodruff Key 3/16 x 5/8
31	634A57	Input Shaft and Pinion
32	5855H	Relief Valve
33	6872H	Gear Shift Cover
34	4913H	Gasket
35	1665H	*Locknut 5/16 - 18 UNC
36	4002P	*Pipe Plug 1/2 - 14 N.P.T.
37	624A57	Gear Case and Bearings R.H. Half. (Inc. Key No's. 12, 16 & 20)
38	4878H1	Gear Case Shield R.H.
39	1004P	*Lockwasher 3/8
40	501P	*Hex Nut 3/8 - 16 UNC
41	1003P	*Lockwasher 5/16
42	504P	*Hex Nut 5/16 - 18 UNC
43	7850H	Spacer
44	1537P	*Washer 11/32 x 11/16 x 16 Ga.
45	3030P	*Hex Bolt 3/8 - 16 x 2 - 1/4
46	5586P	Hex Hd. Roll-Lok Thd. Forming Screw 5/16 - 18 x 1 - 1/2
47	3010P	*Hex Bolt 5/16 - 18 x 3/4
48	3015P	*Hex Bolt 5/16 - 18 x 2
49	5585P	Flat Hd. Slotted Roll-Lok Thd. Forming Screw 5/16 - 18 x 1 - 1/2
50	3018P	* Hex Bolt 5/16 - 18 x 6
51	3008P	* Hex Bolt 5/16 - 18 x 1/2

*STANDARD HARDWARE–PURCHASE LOCALLY

ROTO-TILLER ATTACHMENT–MODEL NO. TT517AR
TECUMSEH ENGINE–MODEL NO. H60-75451K

ENGINE

ALL ENGINE PARTS MUST BE PURCHASED THROUGH AND SERVICE PERFORMED BY YOUR LOCAL TECUMSEH DEALER.

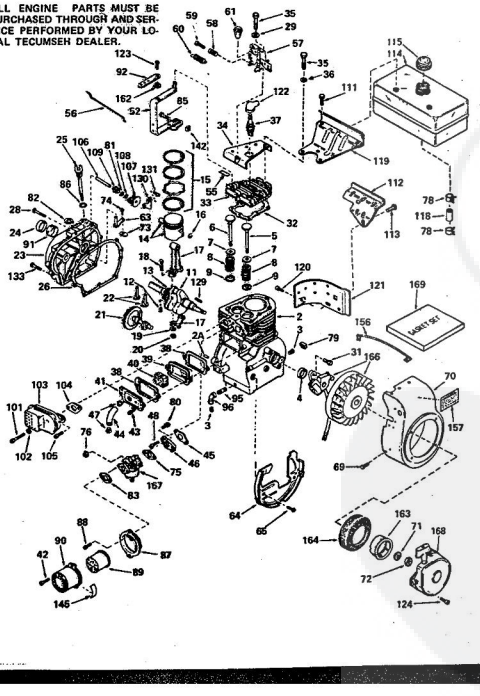

ROTO-TILLER ATTACHMENT–MODEL NO. TT517AR
TECUMSEH ENGINE–MODEL NO. H60-75451K

ENGINE

KEY NO.	PART NO.	DESCRIPTION
1	666192	Complete Engine
2	33311B	Cylinder Assembly (Incl. Nos. 2A, 3, 4 & 5)
2A	27652	Pin, Dowel
3	27642	Plug, Sq. hd. pipe (oil drain)
4	27876B	Seal, Oil
5	32783	Valve, Intake (Standard) (Incl. No. 9)
5	32784	Valve, Intake (1/32" oversize) (Incl. No. 9)
6	27876A	Valve, Exhaust (Standard) (Incl. No. 9)
6	27880A	Valve, Exhaust (1/32" oversize) (Incl. No. 9)
7	27882	Cap, Upper valve spring
8	27881	Spring, Valve
9	32581	Cap, Lower valve spring
11	30799	Crankshaft Assy. (Incl. Nos. 12 & 13)
12	29783	Pin, Crankshaft gear
13	27884	Gear, Crankshaft
14	33312	Piston & Pin Assy. (Standard) (Incl. 2 of No. 16)
14	33313	Piston & Pin Assy. (.010 oversize) (Incl. 2 of No. 16)
14	33314	Piston & Pin Assy. (.020 oversize) (Incl. 2 of No. 16)
15	33315	Ring Set, Piston (Standard)
15	33316	Ring Set, Piston (.010 oversize)
15	33317	Ring Set, Piston (.020 oversize)
16	27888	Ring, Piston pin retaining
17	31380C	Rod Assy., Connecting (Incl. Nos. 18, 19 & 20)
18	30682	Bolt, Connecting rod
19	26073	Washer, Connecting rod
20	28264	Nut, Lock
21	33166	Camshaft (Compression Release)
22	34034	Lifter, Valve
23	31303B	Cover, Cylinder (Incl. Nos. 24, 91 & 106)
24	28427	Seal, Oil
25	31297	Dipstick, Oil (Incl. No. 86)
26	*30684	Gasket, Cylinder cover
28	650488	Screw, Hex hd. Sems, 1/4-20 x 1-1/4
29	26073	Washer, Flat, 5/16"
31	650489	Screw, Hex hd. Sems, 1/4-20 x 5/8
32	*28938B	Gasket, Cylinder head
33	30938A	Head, Cylinder
34	30939A	Cover, Cylinder head
35	650697	Screw, Hex hd. cap, 5/16-18 x 2-1/2
36	650691	Washer, Flat
37	33636	Plug, Spark
38	*27896	Gasket, Valve spring cover
39	28423	Body, Breather
40	28424	Element, Breather
41	28425	Cover, Valve spring
42	650152	Screw, Fil. slotted hd. Sems, 8-32 x 3/8
43	650128	Screw, Fil. slotted hd. Sems, 10-24 x 1/2
44	32447	Tube, Breather
45	*27915	Gasket, Intake
46	30195A	Flange, Carburetor (Incl. Nos. 76 & 80)
47	32446	Grommet, Breather tube
48	30196	Screw, Fil. hd. mach., P.C.R., 5/16-18 x 3/4
52	32326A	Lever, Governor
55	33107	Decal, Control
56	31710	Link, Governor lever-to-throttle
57	31726A	Bracket Assy., Speed control (Incl. Nos. 58, 59 & 61)
58	28569	Spring, Compression
59	29500	Screw, Slotted fil. hd. Sems, 8-32 x 3/4
60	34043	Spring, Extension
61	32410	Knob, Speed control
63	30699C	Rod Assy., Governor (Incl. Nos. 73 & 74)
64	29536	Baffle, Blower housing
65	650561	Screw, Fhil. hex hd. Sems, 1/4-20 x 5/8
69	29747A	Screw, Hex hd. Sems, cap, 5/16-24 x 3/4
70	32158C	Housing, Blower
71	650490	Washer, Belleville
72	8116	Nut, Crankshaft
73	30700	Yoke, Governor
74	650494	Screw, Phil. fil. hd. Sems, 6-40 x 5/16
75	*31688	Gasket, Carburetor
76	29752	Nut & Lockwasher, 1/4-28
78	26460	Clamp, Fuel line
79	27275	Clip, Wire
80	650572	Screw, Phil. flat hd. Sems, 1/4-28 x 1-1/8
81	30590A	Washer, Flat
82	29642	Ring, Retaining
83	*27272	Gasket, Air cleaner
85	29826	Screw, Hex slotted washer hd. mach., 10-32 x 3/4
86	*29673	Gasket, Dipstick
87	31708	Bracket, Air cleaner
88	28820	Screw, Phil. fil. hd. mach. Sems, 10-32 x 1/2
89	31700	Element, Air cleaner

*Indicates Parts Included in Gasket Set, Ref. No. 169.

PDF Complete
Your complimentary use period has ended. Thank you for using PDF Complete.
Click Here to upgrade to Unlimited Pages and Expanded Features

ENGINE

ALL ENGINE PARTS MUST BE PURCHASED THROUGH AND SERVICE PERFORMED BY YOUR LOCAL TECUMSEH DEALER.

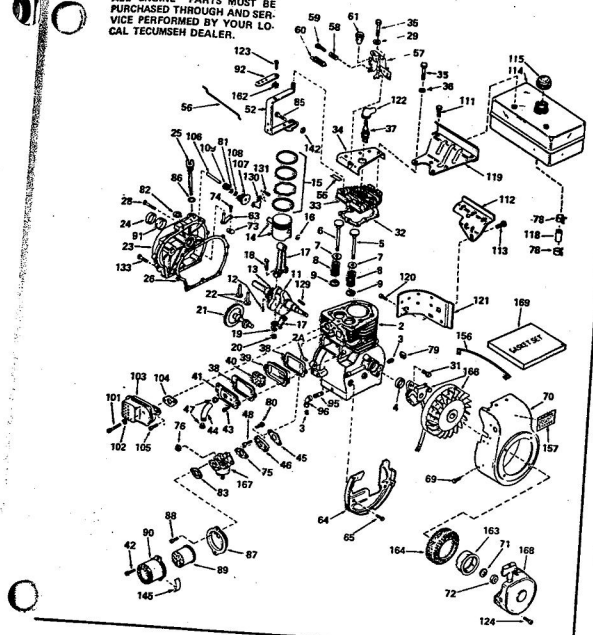

ENGINE

KEY NO.	PART NO.	DESCRIPTION
90	31692	Body, Air cleaner
91	31846	Bushing, Crankshaft
92	30205	Bracket, Governor adjusting
95	30968	Nipple, Pipe
96	32214	Elbow, Oil drain
101	650694	Screw, Hex hd. cap, 5/16-18 x 2
102	29073	Washer, Flat, 5/16"
103	32401	Muffler
104	*27930	Gasket, Exhaust
105	30196	Screw, Fil. hd. mach., P.C.R., 5/16-18 x 3/4
106	31845	Shaft, Mechanical governor
107	30591	Gear Assembly, Governor (Incl. No. 81)
108	29193	Ring, Retaining
109	30568A	Spool, Governor
111	650665	Screw, Hex hd. Sems, 1/4-14 x 7/8
112	34158	Bracket, Fuel tank
113	650561	Screw, Phil. hex hd. Sems, 1/4-20 x 5/8
114	34156	Tank, Fuel
115	32387A	Cap, Fuel tank
118	30962	Line, Fuel
119	34159	Plate, Fuel tank mounting
120	650128	Screw, Fil. slotted hd. Sems, 10-24 x 1/2
121	30622	Extension, Blower housing
122	610118	Cover, Spark plug
123	650548	Screw, Hex slotted washer hd., 8-32 x 3/8
124	29716	Screw, Phil. pan hd. 1/4-28 x 7/16
129	30884	Key, Flywheel
130	31843A	Bracket, Governor gear
131	28763	Screw, Hex washer hd., t forming, 10-24 x 1/2
133	650493	Screw, Hex hd. Sems, 1/4 1-3/4
142	29216	Nut, Square, 10-32
145	31871A	Decal, Air cleaner
156	32488	Wire, Ground
157	34136	Decal, Instruction
162	29918	Lockwasher, No. 8 E.T.
163	32125	Cup, Starter
164	590417	Screen, Starter cup
166	610689A	Magneto (The comp magneto is not available a assembly. The magneto num is shown for reference purp only. Order component p individually, as shown in p list.)
167	631067A	Carburetor (Incl. No. 75)
168	590420	Starter Assembly, Rewind
169	33235	Gasket Set (Incl. items mark *)

*Indicates Parts Included in Gasket Set, Ref. No. 169.

OPTIONAL EQUIPMENT

Spark Arrestor Muffler 391026

REWIND STARTER NO. 590420

ALL ENGINE PARTS MUST BE PURCHASED THROUGH AND SERVICE PERFORMED BY YOUR LOCAL TECUMSEH DEALER.

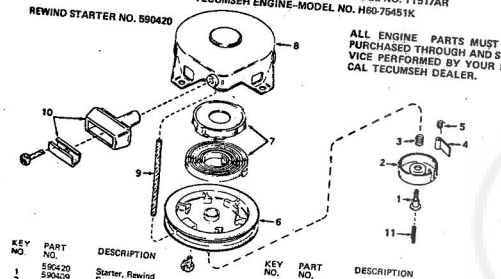

KEY NO.	PART NO.	DESCRIPTION
1	590420	Starter, Rewind
2	590409	Screw, Retainer
3	590410	Retainer, R.H.
4	590411	Spring, Brake
5	590148	Dog, Starter
6	590412	Spring, R.H. Dog
7	590413A	Pulley
8	590414	Spring and Keeper Assembly
9	590415	Housing Assembly, Starter
10	590396	Rope, Starter
11	590397	Handle Assembly, Starter
	590459	Pin, Centering

MAGNETO NO. 610689A

The complete magneto is not available as an assembly. The magneto number is shown for reference purposes only. Order component parts individually, as shown in parts list.

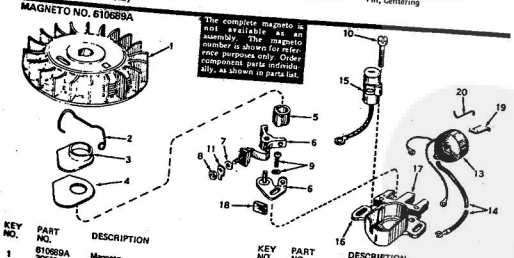

KEY NO.	PART NO.	DESCRIPTION
1	610689A	Magneto
2	30558	Flywheel
3	30651	Spring, Breaker Box Dust Cover
4	30650	Cover, Breaker Box Dust
5	33895	Gasket, Dust Cover
6	30992	Cam, Breaker
7	30547A	Breaker Assembly
8	610385	Washer, Terminal
9	610408	Nut, Terminal
	29181	Screw and Washer Assembly, Breaker
10	610593	Screw, Condenser Fastening
11	33356	Tab, Ground Terminal
13	30560A	Coil Assembly (Inc. No. 14)
14	30554	Wire, Ignition Lead
15	30548A	Condenser
16	30545	Core and Plate Group
17	305618	Stator Assembly (Inc. No's. 2, 3, 4, 6 thru 16, 18, 19 & 20)
18	30549	Felt, Cam Wiper
19	29629	Spring, Coil Wedge
20	31371	Clip, Coil Locking

CARBURETOR NO. 631067A

ALL ENGINE PARTS MUST BE PURCHASED THROUGH AND SERVICE PERFORMED BY YOUR LOCAL TECUMSEH DEALER.

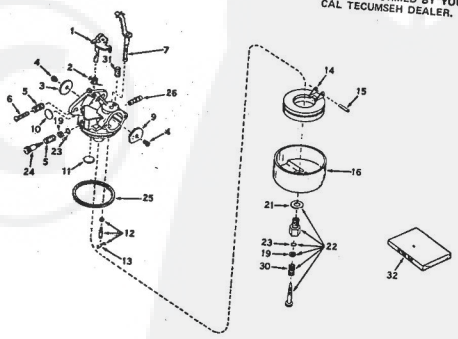

KEY NO.	PART NO.	DESCRIPTION
1	631067A	Carburetor
2	31834	Shaft & Lever Assy., Throttle
3	630731	Spring, Throttle return
4	631036	Shutter, Throttle
5	650506	Screw, 4-40 x 3/16
6	630766	Spring, Idle regulating screw
7	650417	Screw, Idle regulating
9	31836	Shaft & Lever Assy., Choke
10	31837	Shutter, Choke
11	*630746	Plug, Welch
12	*631027	Plug, Welch
	*631021	Inlet Needle, Seat & Clip Assy. (Incl. No. 13)
13	631022	Clip, Inlet needle
14	631023	Float, Carburetor
15	*631024	Shaft, Float
16	631867	Bowl, Float
19	630739	Washer
21	27110	Gasket, Bowl-to-body
22	*31839	Adjustment Screw Assy., Main (Incl. Nos. 19, 21, 23 & 30)
23	*630740	"O" Ring, Adjustment screw
24	*631078	Screw, Idle adjustment
25	*631028	Gasket, Bowl-to-body
26	631803	Fitting, Fuel inlet
30	630738	Spring, Main adjustment screw
31	630735	Spring, Choke stop
32	31840	Repair Kit (Incl. items marked*)

PDF Complete
Your complimentary use period has ended. Thank you for using PDF Complete.
Click Here to upgrade to Unlimited Pages and Expanded Features

ROPER TRACTOR SEEDER

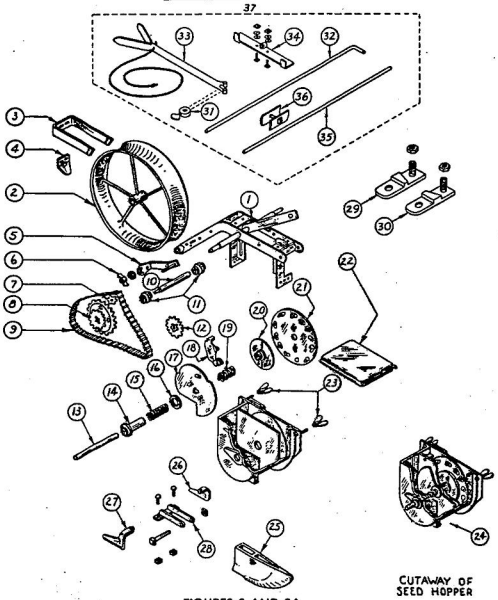

FIGURES 3 AND 3A

CUTAWAY OF SEED HOPPER

ROPER TRACTOR SEEDER PARTS LIST

Illus. No.	Part No.	Part Name
1	#17034R	Chassis Assembly
2	#17112B	Concave Rear Wheel
3	#17093	Rear Scraper Bracket
4	#17117	Concave Wheel Scraper
5	#17182B	Idler Lever Assembly
6	#10000	5/16 - 18 Wing Nut
7	#17081	Idler Sprocket 6T
8	#17019	Large Double Sprocket 12T-18T
9	#10001	Sprocket Chain #25 Link Belt 45 Links
10	#17046	Rear Axle
11	#17045	Rear Wheel Bushings
12	#17018	Small Double Sprocket 6T-12T
13	#17055	Hopper Shaft
14	#17092	Hopper Sleeve Assembly
15	#17062	Flow Control Disc Spring
16	#17058	Hopper Flow Disc Washer
17	#17061	Flow Control Disc
18	#17102	Brush Assembly
19	#17063	Driving Disc Spring
20	#17064	Driving Disc Assembly
21	#17020A12	1/8 Diam. Pocket (12 Pocket Seed Disc)
	#17020B12	3/16 Diam. Pocket (12 Pocket Seed Disc)
	#17020C12	1/4 Diam. Pocket (12 Pocket Seed Disc)
	#17020D12	5/16 Diam. Pocket (12 Pocket Seed Disc)
	#17020E12	3/8 Diam. Pocket (12 Pocket Seed Disc)
	#17020F12	1/2 Diam. Pocket (12 Pocket Seed Disc)
	#17020G12	9/16 Diam. Pocket (12 Pocket Seed Disc)
	#17020E 2	3/8 Diam. Pocket (2 Pocket Seed Disc)
	#17020F 2	1/2 Diam. Pocket (2 Pocket Seed Disc)
	#17020G 2	9/16 Diam. Pocket (2 Pocket Seed Disc)
	#17020J 2	3/4 Diam. Pocket (2 Pocket Seed Disc)
22	#17097	Hopper Cover
23	#17094	5/16 - 18 Wing Nut
24	#17060	Hopper Welded Assembly
25	#18093	Hopper Shoe
26	#18090	L. H. Coverer Blade
27	#18089	R. H. Coverer Blade
28	#18091	Coverer Bracket Assembly
29	#17303A	L.H. Adapter Plate
30	#17302A	R.H. Adapter Plate
31	#17024	Marker Collar
32	#17025R	Marker Rod
33	#17078H	Marker
34	#17310	Marker Mtg. Bracket Assembly
35	#17311	Marker Ext. Rod
36	#17312	Marker Ext. Clamp Assembly
37	#17313	Complete Marker Assembly

MASTERS MFG. & EQUIP. COMPANY
400 Ryder
Litchfield, Illinois 62056

Order parts from address listed above.

NOTE: The Seed Discs (Tow Pocket), E-2, F-2, and J-2, are not furnished as standard equipment. These discs are optional and are available by special orders.

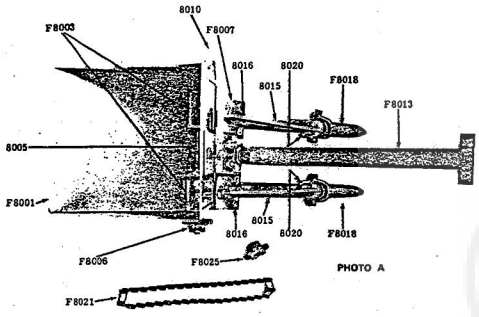

PHOTO A

FERTILIZER PARTS LIST

Part Number	No. Required	Part Name
F8001	1	Fertilizer Body only, including Feed Adjustment Gauge
F8003	2	Agitators
8005	1	Fertilizer Shaft
F8006	1	Fertilizer Sprocket 6T 7/16 Bore
F8007	1	Fertilizer Mounting bracket Assembly w/bolts, washers, and nuts
8010	1	Feed Adjustment gauge
F8013	1	Mounting Bracket
8015	2	Feed Tubes
8016	2	U Bolts w/nuts
F8018	2	Opener Assemblies
8020	2	U Bolts w/nuts
F8021	1	Std. #25 Link Belt Chain 38 Links
F8025	1	Axle Sprocket 6T

PDF Complete
Your complimentary use period has ended. Thank you for using PDF Complete.
Click Here to upgrade to Unlimited Pages and Expanded Features

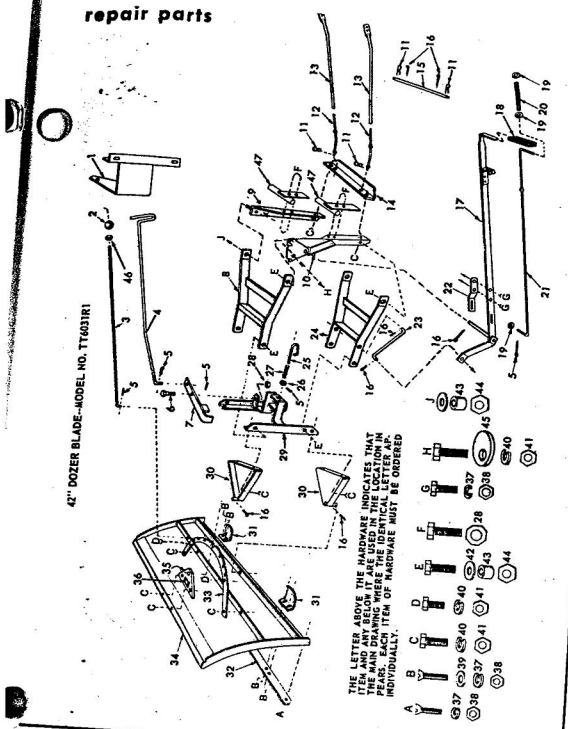

42" DOZER BLADE--MODEL NO. TT6031R1

KEY NO.	PART NO.	DESCRIPTION
1	626A322	Rod Bracket Assembly
2	6364H	Control Knob
3	7363H	Blade Rod
4	2032R	Lock Rod
5	2505P	*Cotter Pin 1/8 x 3/4
6	3023P	*Hex Bolt 3/8-16 x 1
7	634A143	Pivot Arm Weldment
8	626A280	Upper Lift Frame
9	626A533	Mounting Angle-R.H. Weldment
10	626A261A	Mounting Angle and Quadrant Assembly-L.H.
11	4940M	Retainer Spring
12	626A310	Push Rod Front Weldment
13	1840R	Push Rod
14	5201H	Mounting Angle Brace
15	1049R	Lower Link Pin
16	2501P	*Cotter Pin 5/32 x 1
17	626A534	Lever and Arm Assembly
18	8208H	Handle Grip
19	1513P	*Washer 13/32 x 13/16 x 16 Ga.
20	1539U1	Spring
21	8200H	Lever Plunger
22	4338M	Lever Clip Lower
23	7364H	Lift Rod
24	626A46A	Lower Link Pin
25	6205R	Lower Lift Frame
26	1517P	Latch
27	7962H	*Washer 7/16 x 1 x 14 Ga.
28	545P	Spring
29	606A97B	*Locknut 3/8-16 UNC
		Front Frame

KEY NO.	PART NO.	DESCRIPTION
30	626A262	Fork
31	9026M	Blade Shoe
32	899R	Blade Edge
33	8884H	Arch
34	626A258	Blade
35	1411H	Upper Pivot Gusset
36	------	Model Number Plate
37	1002P	*Lockwasher 1/4
38	503P	*Hex Nut 1/4-20 UNC
39	1506P	*Washer 9/32 x 5/8 x 16 Ga.
40	1004P	*Lockwasher 3/8 Heavy Duty
41	501P	*Hex Nut 3/8-16 UNC
42	1544P	*Washer 15/32 x 59/64 x 16 Ga.
43	5222H	Bushing
44	7762H	*Lock Nut 7/16-14 UNC
45	2409R	Lift Lever Stop
46	588P	Hex Jam Nut 3/8-16 UNC
47	626A432	Oscillation Stop
A	3064P	*Flat Hd. Screw 1/4-20 x 3/4
B	3130P	*Flat Hd. Screw 1/4-20 x 1
C	3023P	*Hex Bolt 3/8-16 x 1
D	3021P	*Hex Bolt 3/8-16 x 3/4
E	3035P	*Hex Bolt 7/16-14 x 1-1/4
F	3025P	*Hex Bolt 3/8-16 x 1-1/4
G	3003P	*Hex Bolt 1/4-20 x 3/4
H	3137P	Hex Bolt 3/8-16 x 1-1/4 Heat Treated
I	1544P	*Washer 15/32 x 59/64 x 16 Ga.
J	6240R	Owners Manual

*STANDARD HARDWARE--PURCHASE LOCALLY

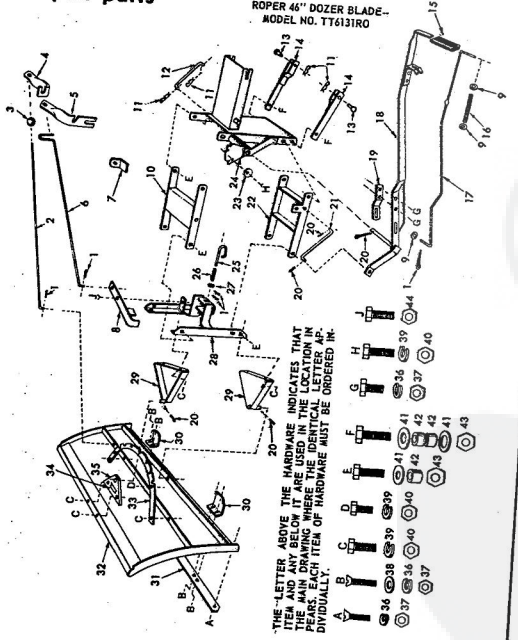

ROPER 46" DOZER BLADE--MODEL NO. TT6131RO

KEY NO.	PART NO.	DESCRIPTION
1	2505P	*Cotter Pin 1/8 x 3/4
2	7363H	Blade Rod
3	6364H	Control Knob
4	4703R	Rod Bracket
5	2009R	Lock Rod
6	2008R	Clutch Lever Lock
7	634A143	Pivot Arm Weldment
8	1513P	Washer 13/32 x 13/16 x 16 Ga.
9	634A142	Upper Frame
10	4940M	Retainer Spring
11	1401H	Push Rod
12	634A264	*Drilled B.H. Rivet
13	8206H	Handle Grip Assembly
14	1539U1	Spring
15	8200H	Lever Plunger
16	3997R	Lever and Arm
17	634A399	Lever Clip Lower
18	3998R	Lever Clip Upper
19	2518P	*Cotter Pin 5/32 x 1
20	1392R	Lift Rod
21	634A305	Lower Frame
22	2409R	*Lift Lever Stop
23	634A445A	Rear Frame Assembly
24	6090M	Latch
25		

KEY NO.	PART NO.	DESCRIPTION
26	7809H	Spring
27	1517P	Front Frame
28	606A97B	Fork
29	626A462	Blade Edge
30	9026M	Blade
31	918R	Arch
32	634A438	Model Number Plate
33	886M	Upper Pivot Gusset
34	------	Lockwasher ¼
35	1411H	Hex Nut 1/4-20 UNC
36	1506P	Washer 9/32 x 5/8 x 16 Ga.
37	1004P	*Lockwasher 3/8
38	501P	*Hex Nut 3/8-16 UNC
39	1544P	*Washer 15/32 x 59/64 x 16 Ga.
40	5222H	*Bushing
41	7762H	*Lock Nut 7/16 - 14 Crown Lock Nut 3/8 - 16 UNC
42	552P	Heat Treated
43	304-P	Flat Hd. Mach. Screw ¼-20 x ¾
A	3130P	Flat Hd. Mach. Screw ¼-20 x 1
B	3023P	*Hex Bolt 3/8 - 16 x 1
C	3021P	*Hex Bolt 3/8 - 16 x ¾
D	3035P	*Hex Bolt 7/16 - 14 x 1¼
E	3025P	*Hex Bolt 3/8 - 16 x 1¼
F	3003P	*Hex Bolt ¼-20 x ¾
G	3137P	Hex Bolt 3/8 - 16 x 1¼ Heat Treated
H	3986R	Hex Bolt 3/8 - 16 x 1 Heat Treated
I		Owners Manual
J		

* Indicates all items shipped in bag of parts with new Bulldozer-Snowplow.

PDF Complete
Your complimentary use period has ended. Thank you for using PDF Complete.
Click Here to upgrade to Unlimited Pages and Expanded Features

SNOW THROWER--MODEL NUMBER TT6231RO

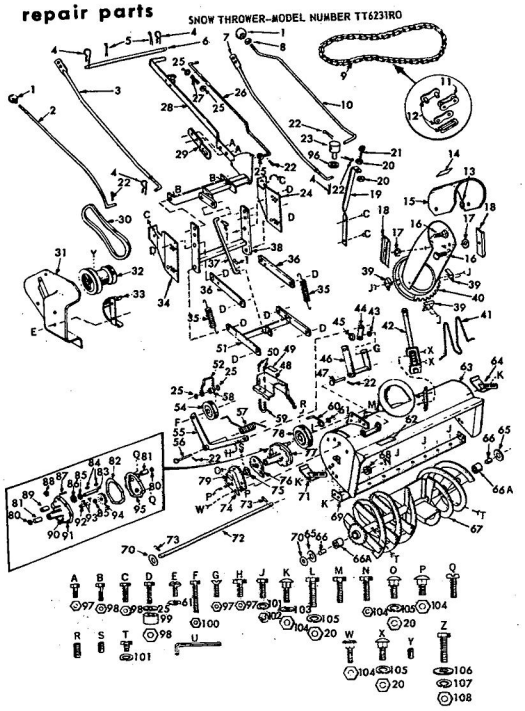

KEY NO.	PART NO.	DESCRIPTION
1	6364H	Control Knob
2	5319H	Clutch Rod
3	626A333	Push Rod Assembly R.H.
4	494DH	Retainer Spring
5	2511P	Cotter Pin 3/16 x 1
6	1049R	Lower Link Pin
7	626A314	Push Rod Assembly L.H.
8	508P	Hex Jam Nut 3/8-16
9	585H	Roller Chain
10	3873R	Chute Control Rod
11	277H	Roller Link
12	276H	Connecting Link
13	1522P	Washer 1/2 x 1¼ x 14 Ga.
14	4620H	Warning Label
15	1783R	Deflector Hood
16	16P	Carriage Bolt 5/16-18 x ¾
17	4614R	Compression Washer
18	626A292	Handle Nut
19	1781R	Chute Control Rod Bracket
20	532P	Hex Nut 5/16-18
21	656H	Eyebolt
22	2505P	Cotter Pin 1/8 x ¾
23	3872R	Chute Control Trunion
24	942R	Hanger Bracket L.H.
25	1513P	Washer 13/32 x 13/16 x 16 Ga.
26	658H	Lever Plunger
27	1539U1	Spring
28	626A393	Pivot Frame Weldment
29	433BH	Lever Clip-Lower
30	1836R	V-Belt (Snow thrower drive)
31	626A124A	Pulley Guard Weldment
*31	626A311	Engine Pulley w/Set Screws for 8 H.P. Tractor
*32	626A312	Engine Pulley w/Set Screws for 10 H.P. Tractor
*33	626A142A	Belt Retainer and Bracket
34	941R	Hanger Bracket R.H.
35	470SH	Spring
36	539H	Swing Bar
37	742SH	Lift Link
38	626A96A	Hanger Weldment
39	2525R	Deflector Clip
40	626A305	Deflector Assembly
41	1789R	Guard
42	626A304	Worm Shaft Assembly
43	1507P	Washer 5/16 x ⅝ x 16 Ga.
44	585OH	Handle Link
45	1508P	Washer 9/32 x 1-1/8 x 7 Ga.
46	634A149A	Toggle Lever Assembly
47	743SH	Drilled R.H. Rivet 5/16x4-1/2
48	634A153	Pulley Guard and Strap
49	586?H	Warning Label
50	4632H	Gripco Nut No. 10-24
51	634A150	Swing Frame-Lower
52	785IH	Belt Retainer
54	470?H	Idler Pulley
55	626A84	Idler Arm and Bushing
56	744SH1	Drilled R.H. Rivet 5/16x4
57	586OH1	Idler Spring
58	785OH	Spacer
59	744OH	U-Bolt
60	785?H1	Belt Guide
61	153?P	Washer 11/32 x 11/16 x 16 Ga.
62	586?H	Warning Label
63	626A306	Housing Assembly
64	626A298	Skid L.H.
65	1570P	Washer 21/32 x 2-1/8 x 16 Ga.
66	469?H	Bearing
66A	626A54	Bearing and Bushing
67	626A297	Impeller w/ Bearings
68	470?H	Chain Block
69	634A199	Scraper and Reinforcement
70	R447H	Fiber Washer
71	626A299	Skid R.H.
72	5324H	Impeller Shaft
73	7836M	Roll Pin 3/16 x 1-1/8
74	937R	Chain Guard
75	585?H1	Sprocket 15 Tooth
76	227?R	Chain Guard Bracket
77	626A100	Gear Case Assembly
78	4689H1	Pulley
79	---	Model Plate
80	4200H	Oil Seal
81	8119M	Bearing
82	4692H	Gasket
83	4644H1	Pinion Shaft
84	5863H	Woodruff Key 1-8 x 1/2
85	6266H	Thrust Washer
86	4647H	Pinion
87	175H	Roll Pin 3/16 x ¾
88	585?H	Relief Valve
89	8118M	Bearing
90	4001P	Pipe Plug ¼ N.P.T.
91	626A87	Gear Case and Bearings
92	5325H2	Gear Shaft
93	985BH1	Woodruff Key 3 16 x 5 8
94	4648H1	Gear
95	626A85	Gear Case Cover w/Bearings
96	1545P	Washer 17-32 x 1 x 16 Ga.
97	1605H	Gripco Nut ¼-20
98	545P	Gripco Nut 3/8-16
99	280M1	Bushing
100	514P	Nylock Nut 3-8-16
101	1002P	Lockwasher ¼
102	503P	Hex Nut ¼
103	1556P	Washer 13/32 x 7.8 x 14 Ga.
104	1685H	Gripco Nut 5/16-18
105	1003P	Lockwasher 5/16
106	2409R	Lever Stop
107	1004P	Lockwasher 3/8
108	501P	Hex Nut 3/8
A	3004P	Hex Bolt ¼-20 x 1
B	3025P	Hex Bolt 3/8-16 x 1¼
C	3027P	Hex Bolt 3/8-16 x 1-1/2
D	3027P	Hex Bolt 3/8-16 x 1-1/2
E	6012P	Slotted Pan Hd. Mach. Screw w/Lockwasher 5/16-18 x 1-1/4
F	3031P	Hex Bolt 3/8-16 x 2-1/2
G	3064P	Flat Hd. Screw ¼-20 x ¾
H	3116P	Hex Bolt ¼-20 x 7/8
J	3114P	Hex Bolt ¼-20 x 1/2
K	16P	Carriage Bolt 5/16-18 x ¾
L	3011P	Hex Bolt 5/16-18 x 1
M	3012P	Hex Bolt 5/16-18 x 1¼
N	3012P	Hex Bolt 5/16-18 x 1¼
O	14P	Carriage Bolt 5/16-18 x 1/2
P	14P	Carriage Bolt 5/16-18 x 1/2
Q	6033P	Slotted Pan Hd. Mach. Screw w/Lockwasher ¼-20 x 1
R	4511P	Set Screw Hex Socket Hdless 5/16-24 x 3/8
S	4507P	Set Screw Hex Socket Hdless ¼-20 x 5/16
T	3112P	Slotted Pan Hd. Mach. Screw ¼-28 x 3/8
U	1843R	Wrench, Allen Set Screw 3/16 Hex
W	7412H	Cowling Pivot Bolt
X	16P	Carriage Bolt 5/16-18 x ¾
Y	4525P	Set Screw Hex Socket Hdless 3/8-16 x 3/8
Z	3137P	Hex Bolt 3/8-16 x 1¼ H.T.
---	3892R	Owners Manual

* Items Not Included With Snow Thrower

SNOW THROWER--MODEL NO. TT6431RO

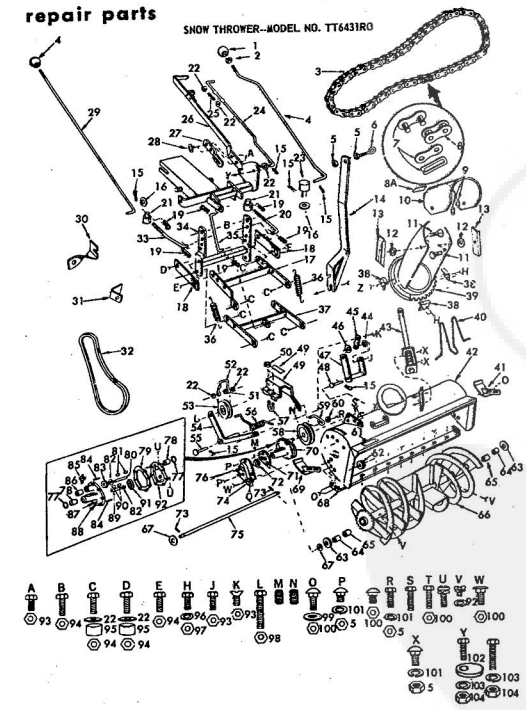

SNOW THROWER--MODEL NO. TT6431RO

KEY NO.	PART NO.	DESCRIPTION
1	9439M	Control Knob
2	508P	Hex Jam Nut 3/8-16
3	932R	Roller Chain
4	3874R	Chute Control Rod
5	504P	Hex Nut 5/16-18
6	656H	Eye Bolt
7	276H	Connecting Link
8	277H	Roller Link
8A	4620H	Warning Label
9	1522P	Washer ½ x 1¼ x 14 Ga.
10	1783R	Deflector Hood
11	16P	Carriage Bolt 5/16-18 x 3/4
12	4614H	Compression Washer
13	626A292	Handle Nut
14	634A606	Chute Rod Support Weldment
15	2505P	Cotter Pin 1/8 x 3/4
16	1545P	Washer 17/32 x 1 x 16 Ga.
17	634A148	Swing Frame-Upper
18	789DH	Push Strap
19	494DH	Retainer Spring
20	656SH	Channel Lock Link
21	656BH	Adjusting Pin
22	1513P	Washer 13/32 x 13/16 x 16 Ga.
23	3872R	Chute Control Trunion
24	994R	Lever Plunger
25	1539U1	Spring
26	634A412A	Pivot Frame & Channel Weldment
27	433BH	Lever Clip-Lower
28	1506P	Washer 9/32 x 3/8 x 16 Ga.
29	7363H	Clutch Rod
30	2010R	Rod Bracket
31	2708R	Clutch Lever Lock
32	1835R	V-belt (Snow Thrower Drive)
33	6591H1	Channel Lock Link (Offset)
34	634A44	Hanger Weldment
35	742SH	Lift Link
36	470SH	Spring
37	634A150	Swing Frame-Lower
38	2525R	Deflector Clip
39	626A305	Chute Assembly
40	1789R	Guard
41	626A298	Skid L.H.
42	626A472	Housing Assembly
43	626A304	Worm Shaft Assembly
44	1509P	Washer 5/16 x 3/4 x 16 Ga.
45	585OH	Handle Link
46	1508P	Washer 9/32 x 1-1/8 x 3/16
47	634A149A	Toggle Lever Assembly
48	743SH	Drilled Rivet 5/16 x 4½
49	634A153	Pulley Guard and Strap
49A	586?H	Warning Lable
50	4632H	Gripco Nut #10-24
51	785OH	Spacer
52	785IH	Belt Retainer
53	470?H	Idler Pulley
54	626A84	Idler Arm and Bushing
55	744SH1	Drilled Rivet 5/16 x 4
56	586OH1	Idler Spring
57	744OH	U-bolt
58	4689H1	Pulley
59	785?H	Belt Guide
60	1537P	Washer 11/32 x 11/16 x 16 Ga.
61	586BH	Warning Label
62	470?H	Chain Block
63	1570P	Washer 21/32 x 2-1/8 x 16 Ga. (0-2 required)
64	4696H	Bearing
65	634A243	Bearing & Bushing
66	634A441	Impeller with Bearings
67	8447H	Fiber Washer
68	634A247	Scraper and Reinforcement
69	626A299	Skid R.H.
70	634A440	Gear Case Assembly
71	938R	Chain Guard Bracket
72	931R	Sprocket 19 Tooth
73	7836M	Roll Pin 3/16 x 1-1/8
74	937R	Chain Guard
75	8432H	Impeller Shaft
76		Model Number Plate
77	4200H	Oil Seal
78	8119M	Bearing
79	4692H	Gasket
80	6567H	Pinion Shaft
81	5863H	Woodruff Key 1/8 x 1/2
82	6266H	Thrust Washer
83	4647H	Pinion
84	175H	Roll Pin 3/16 x 3/4
85	585BH	Relief Valve
86	8118M	Bearing
87	4001P	Pipe Plug ¼ N.P.T.
88	634A245	Gear Case and Bearing
89	8433H	Gear Shaft
90	9858M1	Woodruff Key 3/16 x 5/8
91	4648H1	Gear
92	634A39	Gear Case Cover & Bearings
93	1605H	Gripco Nut ¼-20
94	545P	Gripco Nut 3/8-16
95	280M1	Bushing
96	1002P	Lockwasher ¼
97	503P	Hex Nut ¼-20
98	514P	Nylock Nut 3/8-16
99	1556P	Washer 13/32 x 7/8 x 14 Ga.
100	1685H	Gripco Nut 5/16-18
101	1003P	Lockwasher 5/16
102	2409R	Lever Stop
103	1004P	Lockwasher 3/8
104	501P	Hex Nut 3/8-16
A	3003P	Hex Bolt ¼-20 x ¾
B	3025P	Hex Bolt 3/8-16 x 1¼
C	3025P	Hex Bolt 3/8-16 x 1¼
D	3025P	Hex Bolt 3/8-16 x 1¼
E	3025P	Hex Bolt 3/8-16 x 1¼
H	3114P	Hex Bolt ¼-20 x ½
J	3116P	Hex Bolt ¼-20 x 7/8
K	3064P	Flat Hd. Machine Screw ¼-20 x ¾
L	3031P	Hex Bolt 3/8-16 x 2½
M	4529P	Hex Socket Hdless Set Screw ¼-20 x 5/16 C.P.
N	4511P	Hex Socket Hdless Set Screw 5/16-24 x 3/8 C.P.
O	16P	Carriage Bolt 5/16-18 x ¾
P	14P	Carriage Bolt 5/16-20 x ½
Q	14P	Carriage Bolt 5/16-18 x ½
R	3011P	Hex Bolt 5/16-18 x 1
S	3012P	Hex Bolt 5/16-18 x 1¼
T	3012P	Hex Bolt 5/16-18 x 1¼
U	6033P	Slotted Pan Hd. Mach. Screw W/Lockwasher ¼-20 x 1
V	3112P	Slotted Pan Hd. Mach. Screw ¼-28 x 3/8
W	7412H	Cowling Pivot Bolt
X	16P	Carriage Bolt 5/16-18 x ¾
Y	3137P	Hex Bolt 3/8-16 x 1¼ H.T.
Z	3027P	Hex Bolt 3/8-16 x 1½
---	3980R	Instruction and Parts Book

PDF Complete
Your complimentary use period has ended. Thank you for using PDF Complete.
Click Here to upgrade to Unlimited Pages and Expanded Features

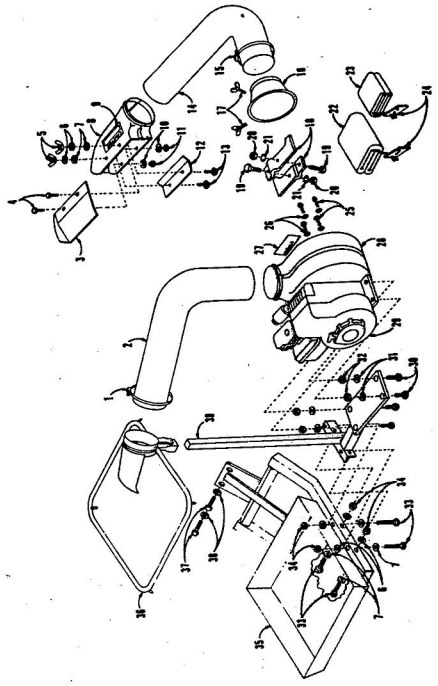

REPAIR PARTS — LAWN VAC Model Number 258.264180

KEY NO.	PART NUMBER 258.264180	DESCRIPTION
1	8 96 H	Hose Clamp 6"
2	025 – 04	Flex Hose 40" Long
3	59	Deflector Plate
4	STD 532505	¼ – 20 x ½ Carriage Bolt
5	5515	3/8" Wing Nut
6	STD 551137	3/8" Med. Lockwasher
7	STD 551037	3/8" Med. Plain Washer
8	B – 48	Mower Deck Boot
9	58	Decal, Caution
10	STD 551125	¼" Med. Lockwasher
11	STD 541025	¼ – 20 Hex Nut
12	53	Boot Clamp Plate
13	STD 533710	3/8 – 16 x 1 Carriage Bolt
14	024 – 04	Flex Hose 32" Long
15	B – 116 – H	Hose Clamp 7"
16	20 – 7	Blower Cone
17	54	5/16 – 18 x 1½ Thumb Screw
18	21	Blower Blade
19	STD 525015	½ – 13 x 1½ Hex Bolt
20	STD 541050	½ – 13 Hex Nut
21	STD 551250	½" Internal Tooth Lockwasher
22	48	Canvas Bag
23	49	Canvas Bag Cover
24	56	Pull Cord Fastener
	51	24 x 24 x 48 Plastic Bag
25	STD 523107	5/16 – 24 x 7/8 Hex Bolt
26	STD 551231	5/16 Internal Tooth Lockwasher
27	57	Decal, Model No.
28	19	Blower Housing
29	80232	3 HP Briggs & Stratton Engine Model 80232 Type 0675 – 01
30	STD 253115	5/16 – 18 x 1½ Hex Bolt
31	STD 551131	5/16 Med. Lockwasher
32	STD 541031	5/16 – 18 Hex Nut
33	STD 523722	3/8 – 16 x 2¼ Hex Bolt
34	STD 541037	3/8 – 16 Hex Nut
35	B – 1 – 10	Tray and Mount Assembly
36	B – 19 – 24	Bag Support Ring
37	STD 525010	½ – 13 x 1 Hex Bolt
38	STD 551150	½ – Med. Lockwasher
39	B – 11 – 18	Engine Support and Upright
40	10189J – 8.74	Owners Manual (Not Illustrated)

ORDER ALL REPLACEMENT PARTS FOR MODEL TT6951R FROM:

PE-CO
2907 SWEETEN CREEK ROAD
ASHVILLE, N. C. 28803

REPAIR PARTS

ELECTRIC 3-POINT HITCH-MODEL NO. TA157AR

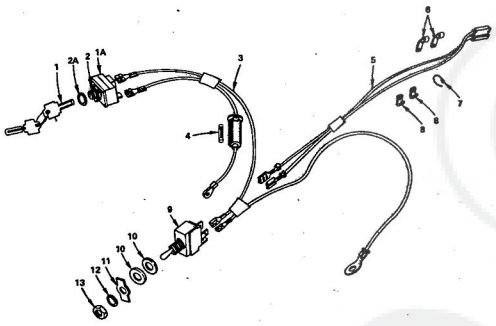

KEY NO.	PART NO.	DESCRIPTION
1	45J	Key Set
1A	50J	Switch,Aux. Key (Inc. Key No. 1)
2	568P	Hex Nut 5/8 - 32
2A	231J	Internal Tooth Lockwasher
3	49J	Harness, Lift & Aux Switch
4	6347R	30 Amp. Fuse
5	8985R	Harness - Lift Motor
6	4171R	Insulated Clip
7	2777R	Tie
8	2751R	Insulated Clip
9	8984R	Lift Switch
10	1518P	Washer 15/32 x 11/16 x 16 Ga.
11	9349R	Up Down Plate
12	7318R	Int. Tooth Lockwasher
13	566P	Hex Nut 15/32 - 32

SPECIAL APPLICATION LIFT LINK KIT-TA187AR

THIS KIT MUST BE USED TO ADAPT YOUR ELECTRIC 3-POINT HITCH WHEN USED WITH A ROTO-TILLER ATTACHMENT AND IS AVAILABLE THROUGH YOUR NEAREST ROPER DEALER.

POWER ASSIST LIFT-MODEL NUMBER TA157AR

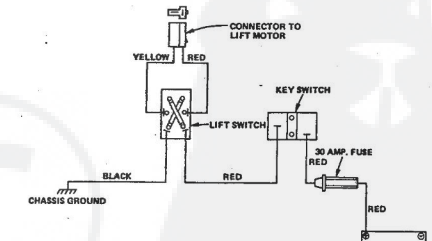

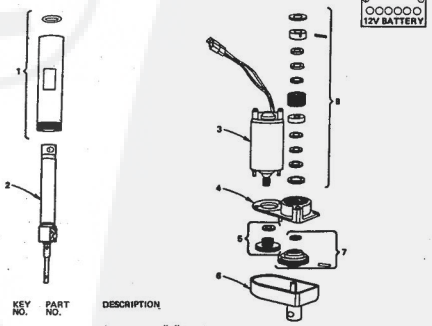

KEY NO.	PART NO.	DESCRIPTION
1	673A108	Cover Tube and "O" Ring Assembly
2	673A107	Jackscrew Assembly
3	673A113	Motor and Pinion Assembly
4	673A111	Front Housing Assembly
5	673A114	Gear, Intermediate
6	673A112	Rear Housing
7	673A110	Clutch Assembly
8	673A109	Brake Assembly
—	673A115	Set of Screws (4 each No. 10 - 24 x 5/8 Torx Pan Hd. Self Tapping Screws and 1 each No. 8 - 32 x 1 Phillips Rd. Hd. Self Tapping Screw)
—	673A116	"O" Ring for Cover Tube

We suggest you take your Electric Act Authorized Roper Service Dealer should arise.

PDF Complete
Your complimentary use period has ended. Thank you for using PDF Complete.
Click Here to upgrade to Unlimited Pages and Expanded Features

POWER ASSIST LIFT–MODEL NUMBER TA157AR

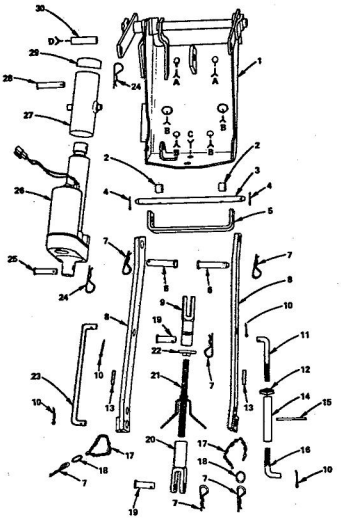

POWER ASSIST LIFT–MODEL NUMBER TA157AR

KEY NO.	PART NO.	DESCRIPTION
1	673A43	Attaching Plate Weldment
2	9527R	Spacer
3	1049R	Link Pin - Lower
4	2511P	Cotter Pin 3/16 x 1
5	8961R	Lower Hitch Bar Bracket
6	8955R	Hitch Bar Pin
7	4940M	Retainer Spring
8	673A41	Lower Hitch Bar
9	8975R	Clevis - R.H. Thread
10	2510P	Cotter Pin 5/32 x 1
11	8951R	Lift Link Upper - R.H.
12	8959R	Locknut, Lift Link - R.H.
13	6798H	Scotchcal
14	1525H	Link Adjustment Sleeve
15	9710M	Roll Pin
16	8952R	Lift Link Lower - R.H.
17	8987R	Chain
18	8988R	Ring
19	8940H	Clevis Pin
20	8936H	Clevis - L.H. Thread
21	673A42	Adjusting Screw and Handle
22	8974R	Adjusting Screw Locknut
23	8953R	Lift Link - L.H.
24	4939M	Retainer Spring
25	8978R	Actuator Pin - Lower
26	673A45	Electric Actuator
27	673A68	Actuator Adapter Weldment
28	9286R	Actuator Pin - Upper
29	8611R	Plastic Cap
30	9147R	Actuator Arms Bushing
31	3044P	*Hex Bolt 1/2 - 13 x 1 - 1/4
32	1000P	*Lockwasher 1/2 Heavy
33	3035P	Hex Bolt 7/16 - 14 x 1 - 1/4
34	1001P	*Lockwasher 7/16 Heavy
35	500P	*Hex Nut 7/16 - 14 UNC
36	1519P	Washer 15/32 x 1 x 12 Ga.
37	63P	Carriage Bolt, Sq. Neck 3/8 - 16 x 3 - 1/2
38	1004P	*Lockwasher 3/8 Heavy
39	501P	*Hex Nut 3/8 - 16 UNC
--	8996R	Owners Manual

*STANDARD HARDWARE–PURCHASE LOCALLY

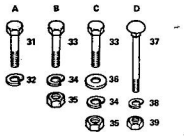

repair parts

THREE POINT HITCH–MODEL NUMBER TA1331RO

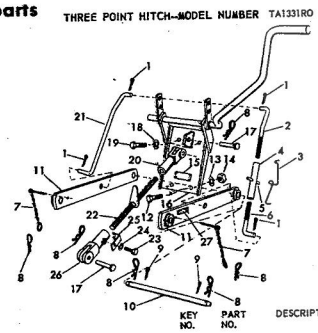

KEY NO.	PART NO.	DESCRIPTION
1	2510P	Cotter Pin 5/32 x 1
2	8924H	Lift Link, Upper - R.H.
3	1592H	Turnbuckle Spring
4	606A108	Turnbuckle, Spring and Roll Pin (Inc. Key No's. 3 and 5)
5	9710M	Roll Pin
6	8923H	Lift Link, Lower - R. H.
7	5012H	Chain, Ring and Cotter
8	4940M	Retainer Spring
9	2511P	Cotter Pin 3/16 x 1
10	1049R	Link Pin, Lower
11	634A290	Hitch Bar and Bushings, Lower
12	3035P	Bolt, Hex 7/16 - 14 x 1¼
13	1001P	Lockwasher 7/16
14	500P	Nut, Hex 7/16 - 14
15		Model Number Plate
16	634A295	Hitch Mount Assembly with Lever
17	8940H	Clevis Pin
18	1000P	Lockwasher ½
19	3044P	Bolt, Hex ½ - 13 x 1¼
20	8936H	Clevis, L.H. Thread
21	8925H	Lift Link - L.H.
22	634A294	Adjusting Screw and Handle
23	3002P	Bolt, Hex ¼ - 20 x 3/8
24	1002P	Lockwasher ¼ Heavy
25	8939H	Spring, Adjusting Screw
26	8935H	Clevis, R.H. Thread
27	6798H	Scotchcal
----	2224M	Drive Stud (For Model Number Plate)
--	3899R	Owners Manual

REPAIR PARTS

MANUAL 3-POINT HITCH–MODEL NUMBER TA207AR

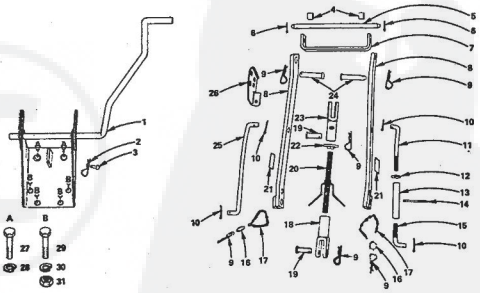

KEY NO.	PART NO.	DESCRIPTION
1	673A44	Attaching Plate and Lift Lever
2	4939M	Retainer Spring
3	8976R	Transport Pin
4	9527R	Spacer
5	1049R	Link Pin Lower
6	2511P	Cotter Pin 3/16 x 1
7	8961R	Lower Hitch Bar Bracket
8	673A41	Lower Hitch Bar and Bushing
9	4940M	Retainer Spring
10	2510P	Cotter Pin 5/32 x 1
11	8950R	Lift Link Upper - R.H.
12	509P	*Hex Jam Nut 1/2 - 13
13	1525H	Link Adjustment Sleeve
14	9710M	Roll Pin
15	8952R	Lift Link Lower - R.H.
16	8988R	Ring
17	8987R	Chain
18	8938H	Clevis - L.H. Thread
19	8940H	Clevis Pin
20	673A42	Adjusting Screw and Handle.
21	6798H	Scotchcal
22	8974R	Adjusting Screw Locknut
23	8975R	Clevis - R.H. Thread
24	8955R	Hitch Bar Pin
25	8954R	Lift Link - L.H.
26	9773R	Lever Stop Bracket
27	3044P	*Hex Bolt 1/2 - 13 x 1 - 1/4
28	1000P	*Lockwasher 1/2 Heavy
29	3035P	Hex Bolt 7/16 - 14 x 1 - 1/4
30	1001P	*Lockwasher 7/16 Heavy
31	500P	*Hex Nut 7/16 - 14
--	8997R	Owners Manual

*STANDARD HARDWARE–PURCHASE LOCAL

PDF Complete
Your complimentary use period has ended. Thank you for using PDF Complete.
Click Here to upgrade to Unlimited Pages and Expanded Features

ORGAINC SHREDDER MODEL NO. H30031RO

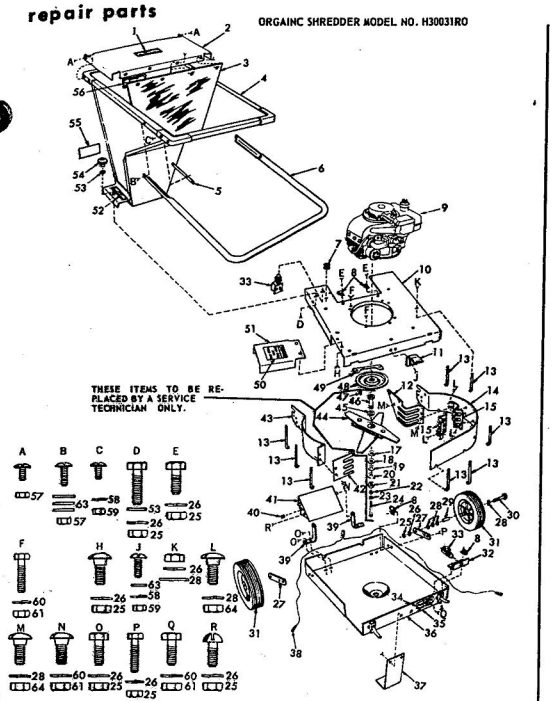

ORGANIC SHREDDER MODEL NO. H30031RO

KEY NO.	PART NO.	DESCRIPTION	KEY NO.	PART NO.	DESCRIPTION
1	3440R	Scotchcal (caution)	46	1376R	Mandrel
2	3308R	Guard	47	4919H	Woodruff Key 5
3	2980R	Rubber Deflector			H.T.
4	658A63	Hopper	48	2611R	Seal Protector
5	3497R	Handle Support	49	2052R	Breaker Angle
6	3515R	Handle	50	3437R	Scotchcal (caut
7	3425R	Grommet	51	3513R	Deflector
8	2521R	Insulated Clip	52	3450R	Scotchcal (caut
9	LAV35-40739K	Engine 3½ H.P. Tecumseh	53	1557P	Washer 13/32 x
10	3522R	Cover	54	1417R	Holddown Knob
11	3505R	Lower Handle Spring	55	3516R	Scotchcal (Non
12	3512R	Heavy Breaker	56	3439R	Scotchcal (caut
13	3500R	Hook Bolt	57	1605H	Locknut ¼-20
14	3519R	Long Wrapper	58	1505P	Washer 9/32 x ¾
15	1402R	Breaker	59	503P	Hex Nut ¼-20
16	2941R	Drive Washer	60	1003P	Lockwasher 5/1
17	2942R	Rubber Washer	61	504P	Hex Nut 5/16-18
18	1423R	Compression Washer	63	1505P	Washer 9/32 x ¾
19	1482R	Nut Lock Plate	64	5394H	Locknut 3/8-16
20	1380R	Nut	A	3253P	Pan Hd. Phillip
21	1404R	Mandrel Washer			Screw ¼-20 x ½
22	1004P	Lockwasher 3/8	B	3275P	Pan Hd. Phillip
23	3246P	Hex Bolt 3/8-24 x 2½ H.T.	C	3253P	Screw ¼-20 x 1
24	501P	Hex Nut 3/8-16	D	3252P	Pan Hd. Phillip
25	1004P	Lockwasher 3/8			Screw ¼-20 x ½
26	3498R	Wheel Bracket			Hex Bolt 3/8-16
27	1513P	Washer 13/32 x 13/16 x 16 Ga.	E	3021P	Full Thread
28	2967R	Wheel Bushing	F	3012P	Hex Bolt 3/8-16
29	3031P	Hex Bolt 3/8-16 x 2½	H	19P	Hex Bolt 5/16-1
30	2613R	Tire and Wheel	J	3253P	Carriage Bolt 3/
31	3499R	Safety Switch Bracket			Pan Hd. Phillip
32	2520R	Safety Switch	K	501P	Screw ¼-20 x ½
33		Model Plate	L	19P	Hex Nut 3/8-16
34	1415R	Decal	M	20P	Carriage Bolt 3/
35	658A46	Clamp Fasteners & Base	N	16P	Carriage Bolt 5/
36	3507R	Ground Pad	O	3021P	Hex Bolt 3/8-16
37	3503R	Shorting Wire	P	3023P	Hex Bolt 3/8-16
38	3506R	Pivot Shaft Support	Q	3010P	Hex Bolt 5/16-1
39	3502R	Grommet	R	3242P	Truss Slotted He
40	658A47	Pivot Shaft Weldment			Screw 3/8-16 x ¾
41	3508R	Air Stripper		3529R	Owners Manual
42	3520R	Short Wrapper			
43	658A29	Blade Weldment			
44	1521R	Wear Washer			
45					

ORGANIC SHREDDER--MODEL NO. H60031RO

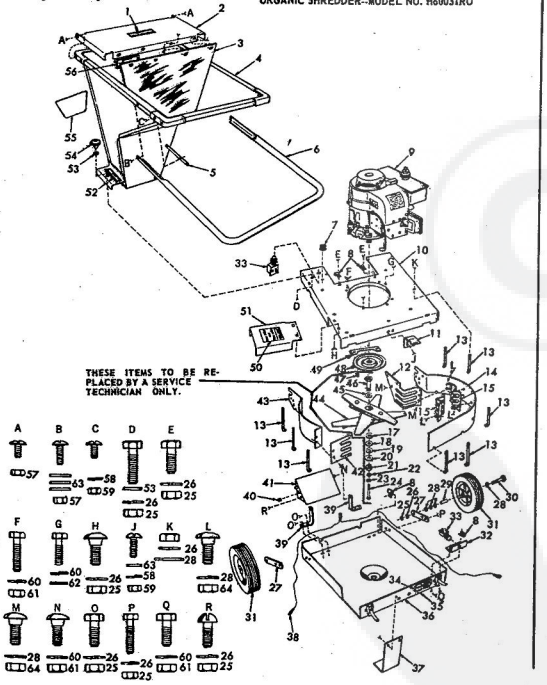

ORGANIC SHREDDER--MODEL NO. H60031RO

KEY NO.	PART NO.	DESCRIPTION	KEY NO.	PART NO.	DESCRIPTION
1	3440R	Scotchcal (caution)	46	1377R	Mandrel
2	3308R	Guard	47	4919H	Woodruff Key 5
3	2980R	Rubber Deflector	48	2612R	Seal Protector
4	658A64	Hopper	49	2052R	Breaker Angle
5	3497R	Handle Support	50	3437R	Scotchcal (cau
6	3514R	Handle	51	3513R	Deflector
7	3425R	Grommet	52	3450R	Scotchcal (cau
8	2521R	Insulated Clip	53	1557P	Washer 13/32 x
9	V60-70252H	Engine (6 H.P. Tecumseh)	54	1417R	Holddown Knob
10	3522R	Cover	55	3516R	Scotchcal (Non
11	3505R	Lower Handle Spring	56	3439R	Scotchcal (cau
12	3512R	Heavy Breaker	57	1605H	Locknut ¼-20
13	3500R	Hook Bolt	58	1505P	Washer 9/32 x
14	3519R	Long Wrapper	59	503P	Hex Nut ¼-20
15	1402R	Breaker	60	1003P	Lockwasher 5/
16	2941R	Drive Washer	61	504P	Hex Nut 5/16-1
18	2942R	Rubber Washer	62	1537P	Washer 11/32 x
19	1423R	Compression Washer	63	1505P	Washer 9/32 x
20	1482R	Nut Lock Plate	64	5394H	Locknut 3/8-16
21	1380R	Nut	A	3253P	Pan Hd. Phillip
22	1404R	Mandrel Washer			Screw ¼-20 x ½
23	1004P	Lockwasher 3/8	B	3275P	Pan Hd. Phillip
24	3246P	Hex Bolt 3/8-24 x 2½ H.T.	C	3253P	Screw ¼-20 x 1
25	501P	Hex Nut 3/8-16	D	3252P	Pan Hd. Phillip
26	1004P	Lockwasher 3/8			Screw ¼-20 x ½
27	3498R	Wheel Bracket			Hex Bolt 3/8-16
28	1513P	Washer 13/32 x 13/16 x 16 Ga.	E	3021P	Full Thread
29	2967R	Wheel Bushing	F	3012P	Hex Bolt 3/8-16
30	3031P	Hex Bolt 3/8-16 x 2½	G	3010P	Hex Bolt 5/16-1
31	2613R	Tire and Wheel	H	19P	Carriage Bolt 3
32	3499R	Safety Switch Bracket	J	3253P	Pan Hd. Phillip
33	2520R	Safety Switch			Screw ¼-20 x ½
34		Model Plate	K	501P	Hex Nut 3/8-16
35	1415R	Decal	L	19P	Carriage Bolt 3
36	658A46	Clamp Fasteners & Base	M	20P	Carriage Bolt 3
37	3507R	Ground Pad	N	16P	Carriage Bolt 5
38	3503R	Shorting Wire	O	3021P	Hex Bolt 3/8-16
39	3506R	Pivot Shaft Support	P	3023P	Hex Bolt 3/8-16
40	3502R	Grommet	Q	3010P	Hex Bolt 5/16-1
41	658A47	Pivot Shaft Weldment	R	3242P	Truss Slotted H
42	3508R	Air Stripper			Screw 3/8-16 x ¾
43	3520R	Short Wrapper		3530R	Owners Manual
44	658A30	Blade Weldment			
45	1521R	Wear Washer			

PDF Complete
Your complimentary use period has ended. Thank you for using PDF Complete.
Click Here to upgrade to Unlimited Pages and Expanded Features

ORGANIC SHREDDER--MODEL NO. H60042RO

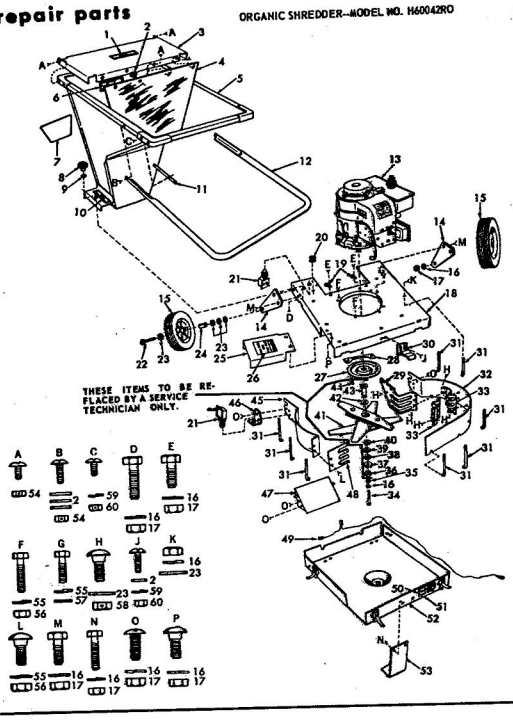

ORGANIC SHREDDER--MODEL NO. H60042RO

KEY NO.	PART NO.	DESCRIPTION
1.	3440R	Scotchcal (Caution)
2.	1505P	Washer 9/32 x ½ x 14 Ga.
3.	3308R	Guard
4.	2980R	Rubber Deflector
5.	658A64	Hopper
6.	3439R	Scotchcal (Caution)
7.	3516R	Scotchcal (Name Plate)
8.	1437R	Holddown Knob
9.	1557P	Washer 13/32 x 13/16 x 11 Ga.
10.	3450R	Scotchcal (Caution)
11.	3497R	Handle Support
12.	3514R	Handle
13.	V60-70252H	Engine (6, H.P. Tecumseh)
14.	5414R	Wheel Bracket
15.	2613R	Tire and Wheel
16.	1004P	Lockwasher 3/8
17.	501P	Hex Nut 3/8-16
18.	5413R	Cover
19.	2521R	Insulated Clip
20.	3425R	Grommet
21.	3520R	Safety Switch
22.	3031P	Hex Bolt 3/8-16 x 2½
23.	1513P	Washer 13/32 x 13/16 x 16 Ga.
24.	2967R	Wheel Bushing
25.	3513R	Deflector
26.	3437R	Scotchcal (Caution)
27.	2612R	Seal Protector
28.	2052R	Breaker Angle
29.	3512R	Heavy Breaker
30.	3595R	Lower Handle Spring
31.	3500R	Hook Bolt
32.	3519R	Long Wrapper
33.	1402R	Breaker
34.	3246P	Hex Bolt 3/8-24 x 2½ H. T.
35.	1404R	Mandrel Washer
36.	1380R	Nut
37.	1482R	Nut Lock Plate
38.	1423R	Compression Washer
39.	2942R	Rubber Washer
40.	2941R	Drive Washer
41.	658A30	Blade Weldment
42.	1521R	Wear Washer
43.	1377R	Mandrel
44.	4919H	Woodruff Key 5/32 x 5/8 H. T.
45.	3520R	Short Wrapper
46.	2715R	Safety Switch Support
47.	658A47	Pivot Shaft Weldment
48.	3508R	Air Stripper
49.	5417R	Shorting Wire
50.	—	Model Plate
51.	1415R	Decal (Patent Pending)
52.	658A86	Clamp Fasteners & Base
53.	3507R	Ground Pad
54.	1605H	Locknut ⅜-20
55.	1003P	Lockwasher 5/16
56.	504P	Hex Nut 5/16-18
57.	1537P	Washer 11/32 x 11/16 x 16 Ga.
58.	5394H	Locknut 3/8-16
59.	1002P	Lockwasher ¼
60.	503P	Hex Nut ¼-20
A.	3253P	Pan Hd. Phillips Mach. Screw ¼-20 x ½
B.	3275P	Pan Hd. Phillips Mach. Screw ¼-20 x 1
C.	3253P	Pan Hd. Phillips Mach. Screw ¼-20 x ½
D.	3252P	Hex Bolt 3/8-16 x 1½ Full Thread
E.	3021P	Hex Bolt 3/8-16 x ¾
F.	3012P	Hex Bolt 5/16-18 x 1¼
G.	3010P	Hex Bolt 5/16-18 x ¾
H.	19P	Carriage Bolt 3/8-16 x ¾
J.	3253P	Pan Hd. Phillips Mach. Screw ¼-20 x ½
K.	501P	Hex Nut 3/8-16
L.	16P	Carriage Bolt 5/16-16 x ¾
M.	3023P	Hex Bolt 3/8-16 x 1
N.	3021P	Hex Bolt 3/8-16 x ¾
O.	3242P	Truss Hd. Slotted Mach. Screw 3/8-16 x ¾
P.	19P	Carriage Bolt 3/8-16 x ¾
—	5421R	Owners Manual

PARTS LIST

BAGGING ATTACHMENT--MODEL NO. HA0232RO

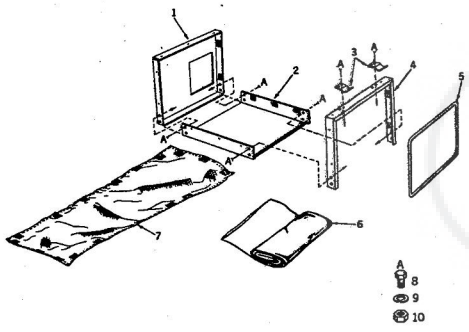

KEY NO.	PART NO.	DESCRIPTION
1	658A59	Net Support Rear And Hook Tape
2	658A58	Net Support Base And Hook Tape
3	4251R	Spring
4	658A57	Net Support Front And Hook Tape
5	4256R	Bag Frame
6	———	+Package of Five Plastic Bags
7	4258R	Net
8	3114P	*Hex Bolt 1/4 - 20 x 1/2
9	1002P	*Lockwasher 1/4"
10	503P	*Hex Nut 1/4 - 20 UNC
—	5446R	Owners Manual

*STANDARD HARDWARE--PURCHASE LOCALLY

+PURCHASE ADDITIONAL PLASTIC BAGS FROM YOUR LOCAL ROPER DEALER

PARTS LIST

BAGGING ATTACHMENT MODEL NUMBER HA0231R

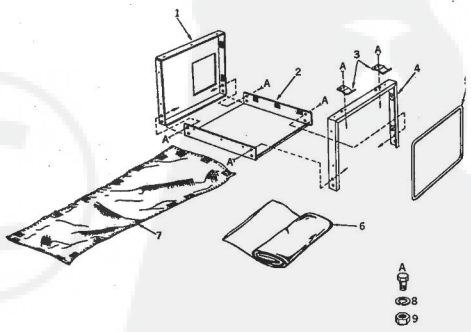

KEY NO.	PART NO.	DESCRIPTION
1	658A57	Net Support Rear & Hook Tape
2	658A58	Net Support Base & Hook Tape
3	4251R	Spring
4	658A59	Net Support Front & Hook Tape
5	4256R	Bag Frame
6		Package of Five Plastic Bags
7	4258R	Net
8	1002P	Lockwasher ¼"
9	503P	Hex Nut ¼-20
A	3114P	Hex Bolt ¼-20 x ½
—	4261R	Instruction Sheet & Parts List

PURCHASE ADDITIONAL PLASTIC BAGS FROM YOUR DEALER.

PDF Complete
Your complimentary use period has ended. Thank you for using PDF Complete.
Click Here to upgrade to Unlimited Pages and Expanded Features

REPAIR PARTS

ROPER 2 H.P. MINI-TILLER–MODEL NO. D2117AR

MAIN FRAME

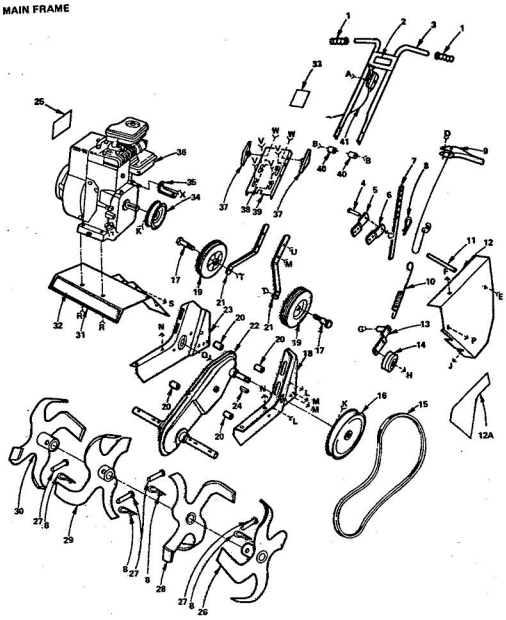

ROPER 2 H.P. MINI-TILLER–MODEL NO. D2117AR

MAIN FRAME

KEY NO.	PART NO.	DESCRIPTION
1	9270R	Handle Grip
2	9621R	Decal - Roper
3	674A46	Handle Weldment
4	9551R	Drilled Rivet
5	9192R	Drag Stake Bracket - R.H.
6	9191R	Drag Stake Bracket - L.H.
7	9193R	Drag Stake
8	4921H	Retainer Spring
9	674A58	Clutch Control Assembly
10	9241R	Spring
11	9183R	Split Spacer
12	9053R	Belt Guard
12A	9617R	Decal - Stripe
13	674A30	Idler Arm Weldment
14	9178R	Idler Pulley
15	9179R	V-Belt
16	9174R	Transmission Sheave
17	4898H	Shoulder Bolt
18	9060R	Engine Bracket - L.H.
19	9186R	Wheel
20	9173R	Split Spacer
21	9188R	Wheel Bracket
22	674A15	Transmission
23	9061R	Engine Bracket - R.H.
24	2649M	Sq. Key
25	9691R	Decal - Engine
26	674A36	Tine Weldment Outer - L.H.
27	9194R	Drilled Rivet
28	674A34	Tine Weldment Inner - L.H.
29	674A35	Tine Weldment Inner - R.H.
30	674A37	Tine Weldment Outer - R.H.
31	9065R	Tine Shield
32	9619R	Decal - Roper Mini-Tiller
33	9614R	Decal - Handle Panel
34	9178R	Engine Sheave
35	9184R	Belt Guard Bracket
36	60102	Engine, 2 H.P. Briggs and Stratton Type No. 0377-02
37	9210R	Knob
38	9224R	Decal - Instructions
39	9209R	Handle Panel
40	9237R	Bushing - Handle Spacer
41	9214R	Throttle Control
42	3005P	*Fin. Hex Bolt 1/4 - 20 x 1 - 1/4
43	1605H	Gripco Center Lock Nut 1/4 - 20 UNC
44	3337P	Slotted Truss Hd. Bolt 5/16 - 18 x 3/4
45	1003P	*Lockwasher 5/16
46	504P	*Hex Nut 5/16 - 18 UNC
47	3342P	Fin. Hex Bolt 3/8 - 24 x 1 - 1/4 Gr. 5
48	7810H	Gripco Center Lock Nut 3/8 - 24 UNF
49	3012P	*Fin. Hex Bolt 5/16 - 18 x 1 - 1/4
50	1685H	Gripco Center Lock Nut 5/16 - 18
51	3339P	Fin. Hex Bolt 1/4 - 20 x 4 - 1/2
52	1506P	Washer 9/32 x 5/8 x 16 Ga.
53	1002P	*Lockwasher 1/4
54	503P	*Hex Nut 1/4 - 20 UNC
55	10P	*Sq. Nk. Carriage Bolt 1/4 - 20 x 1/2
56	3343P	Fin. Hex Bolt Full Thd. 5/16 - 18 x 2
57	3025P	*Fin. Hex Bolt 3/8 - 16 x 1 - 1/4
58	508P	*Hex Jam Nut 3/8 - 16 UNC
59	4537P	*Hex Forged Socket Headless Set Screw C.P. 5/16 - 18 x 3/8
60	3017P	*Fin. Hex Bolt 5/16 - 18 x 2 - 1/2
61	3013P	*Fin. Hex Bolt 5/16 - 18 x 1 - 1/2
62	9239R	Push-On Speed Nut
64	3345P	Fin. Hex Bolt 1/4 - 28 x 3/4 Gr. 5
65	1584P	Washer 9/32 x 7/8 x 12 Ga.
66	1685P	Washer 9/32 x 1 - 1/4 x 16 Ga.
67	3347P	Fin. Hex Bolt 3/8 - 24 x 3 Gr. 5
68	1557P	Washer 13/32 x 13/16 x 11 Ga.
69	1004P	*Lockwasher 3/8
70	514P	Nylok Nut 3/8 - 16 UNC
71	1545P	Washer 17/32 x 1 x 16 Ga.
72	1511P	Washer 3/8 x 7/8 x 14 Ga.
73	16P	*Sq. Nk. Carriage Bolt 5/16 - 18 x 3/4
74	62P	*Sq. Nk. Carriage Bolt Sht. Shoulder 5/16 - 18 x 1 - 1/4
75	1410P	Heavy Internal Lockwasher Type A 5/16
76	3147P	*Fin. Hex Bolt 1/4 - 20 x 2
--	9626R	Owners Manual

*STANDARD HARDWARE–PURCHASE LOCALLY

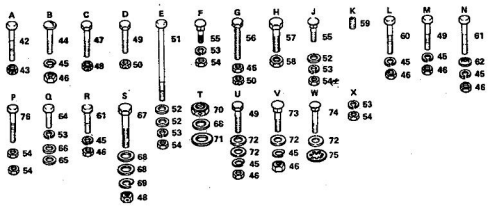

ROPER 2 H.P. MINI-TILLER–MODEL NO. D2117AR
ENGINE–MODEL NUMBER 60102 TYPE 0377-02

CYLINDER & CRANKCASE

ALL ENGINE PARTS MUST BE PURCHASED THROUGH AND SERVICE PERFORMED BY YOUR LOCAL BRIGGS AND STRATTON DEALER.

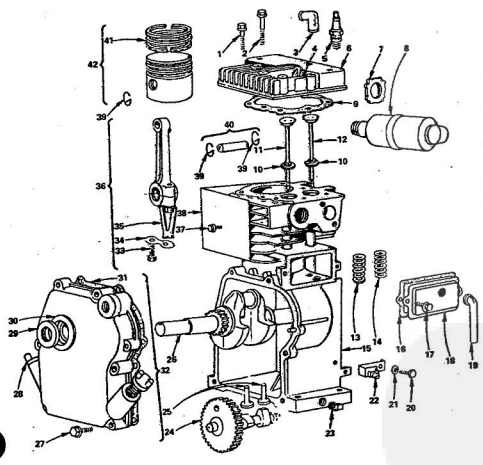

ROPER 2 H.P. MINI-TILLER–MODEL NO. D2117AR
ENGINE–MODEL NUMBER 60102 TYPE 0377-02

CYLINDER & CRANKCASE

KEY NO.	PART NO.	DESCRIPTION
1	93111	Screw, Cylinder Head 1 - 15/16 L.
2	93113	Screw, Cylinder Head 2 - 5/16 L.
3	66538	Elbow, Spark Plug
4	210812	Head, Cylinder
5	298809	Plug, Spark
6	220581	Cover, Cylinder Head
7	91811	Locknut, Exhaust Elbow
8	295905	Muffler, Exhaust
9	27670	**Gasket, Cylinder Head
10	93312	Retainer, Valve Spring
11	296676	Valve, Exhaust
12	296677	Valve, Intake
13	26478	Spring, Exhaust Valve
14	280552	Spring, Intake Valve
15	296561	Cylinder Assembly
16	27549	**Gasket, Valve Cover
17	93394	Screw, Breather Mounting
18	294178	Breather, Valve Chamber
19	295217	Tube, Breather and Air Cleaner Gasket
20	93062	Screw, Sem
21	66432	Washer
22	294502	Bracket, Control Wire Casing
23	93448	Plug, Pipe
24	210453	Gear, Cam
25	280173	Tappet, Valve
26	280248	Crankshaft
27	93032	Screw, Crankcase Cover Mounting 93858 Stud, 90832 Lockwasher
28	66768	Plug, Oil Filler
29	89660	Seal, Oil
30	293708	*Bushing, Crankcase Cover
31	27586	**Gasket, Crankcase
32	294305	Cover Assembly, Crankcase (Inc. Key No's. 28, 29 & 31)
33	92296	Screw, Connecting Rod
34	220460	Lock, Connecting Rod Screw
35	220459	Dipper, Connecting Rod
36	294300	Rod Assembly, Connecting (Inc. Key No's. 33, 34 & 35)
37	93042	Screw, Cylinder Shield Mounting
38	220478	Shield, Cylinder
39	26026	Lock, Piston Pin
40	298909	Pin Assembly, Piston (Inc. Key No. 39)
41	294232	Ring Set, Piston
42	295587	Piston Assembly (Inc. Key No's. 39 & 41)

*SPECIAL TOOLS REQUIRED TO INSTALL

**INCLUDED IN GASKET SET NO. 297275

SPARK ARRESTING MUFFLER

392617	Low Tone Muffler (1 required)
391911	Cap (1 required)
93705	Screw (4 required)

PDF Complete
Your complimentary use period has ended. Thank you for using PDF Complete.
Click Here to upgrade to Unlimited Pages and Expanded Features

ROPER 2 H.P. MINI-TILLER–MODEL NO. D2117AR
ENGINE–MODEL NUMBER 60102 TYPE 0377-02

CARBURETOR

ALL ENGINE PARTS MUST BE PURCHASED THROUGH AND SERVICE PERFORMED BY YOUR LOCAL BRIGGS AND STRATTON DEALER.

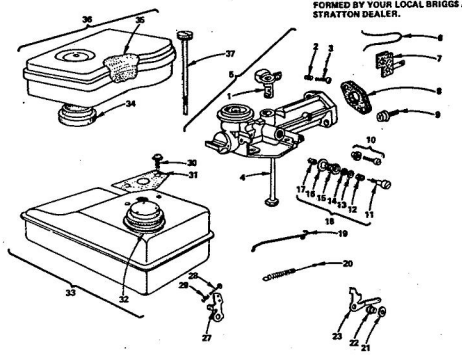

KEY NO.	PART NO.	DESCRIPTION
1	210719	Throttle, Carburetor
2	260575	Spring, Throttle Adjusting
3	92834	Screw, R.H. Machine
4	296476	Pipe, Fuel
5	391338	Carburetor Assembly (Inc. Key No's. 1, 2, 3, 4, 10 & 18)
6	391115	Wire, Ground
7	296110	Plate Assembly, Stop Switch Insulated
8	27355	*Gasket, Carburetor
9	93357	Screw, Carburetor Mounting
10	93177	Screw, Bell Crank Mounting
11	23433	Valve, Needle
12	28336	Spring, Needle Valve
13	22235	Washer, Needle Valve
14	16978	Packing, Needle Valve
15	23431	Nut, Needle Valve
16	65787	Gasket, Needle Valve Nut
17	23432	Seat, Needle Valve
18	299059	Needle Valve Kit (Inc. Key No's. 11, 12, 13, 14, 15, 16 & 17)
19	260040	Link, Governor
20	260623	Spring, Governor
21	220982	Washer
22	230531	Bushing, Bell Crank
23	221147	Crank, Bell
27	220678	Lever, Speed Adjuster
28	92634	Screw, R.H. Machine
29	260575	Spring, Throttle Adjusting
30	93341	Screw, Fuel Tank Mounting
31	27404	*Gasket, Fuel Tank Mounting
32	392304	Cap, Fuel Tank
33	291834	Tank Assembly, Fuel (Inc. Key No. 32)
34	27660	Gasket, Air Cleaner Mounting
35	27987	Element, Air Cleaner
36	296767	Cleaner Assembly, Air (Inc. Key No. 35)
37	93322	Screw, Air Cleaner

*INCLUDED IN GASKET SET NO. 297275

ROPER 2 H.P. MINI-TILLER–MODEL NO. D2117AR
ENGINE–MODEL NUMBER 60102 TYPE 0377-02

STARTER

ALL ENGINE PARTS MUST BE PURCHASED THROUGH AND SERVICE PERFORMED BY YOUR LOCAL BRIGGS AND STRATTON DEALER.

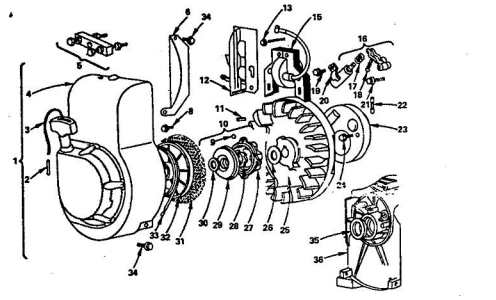

KEY NO.	PART NO.	DESCRIPTION
1	294259	Starter Assembly, Rewind (Inc. Key No's. 2, 3, 4, 32 & 33)
2	230228	Pin, Starter Grip
3	66694	Rope, Rewind Starter
4	294263	Housing, Blower
5	19069	Puller, Flywheel
6	220971	Guard, Flywheel
8	93490	Screw, Rotating Screen Mounting
9	93770	Bolt, Clutch
10	298310	Clutch Assembly, Rewind Starter (Inc. Key No's. 9, 27, 28, 29 & 30)
11	61760	Key, Flywheel
12	297310	Blade, Governor
13	93381	Screw, Armature Mounting
15	298502	Armature, Magneto
16	294628	Breaker Points and Condenser Set (Inc. Key No's. 17 & 18)
17	260374	Spring, Connector
18	26018	Spring, Breaker Arm
19	93042	Screw, Condenser Clamp Mounting
20	220477	Clamp, Condenser
21	93381	Screw, Breaker Arm Mounting
22	65704	Plunger, Breaker Point
23	220366	Cover, Breaker Point and Condenser
24	93014	Screw, Dust Cover Mounting
25	296884	Flywheel, Magneto
26	220865	Washer, Spring
27	211383	Housing, Starter Clutch
28	298436	Ratchet, Rewind Starter
29	221653	Washer, Clutch Retainer
30	68236	Washer, Ratchet Sealing
31	221661	Screen, Rotating
32	280117	Pulley, Rewind Starter
33	294303	Spring, Rewind Starter
34	93158	Screw, Blower Housing Mounting
35	89660	Seal, Oil
36	298561	Cylinder Assembly (Inc. Key No. 35)

REPAIR PARTS

ROPER 3 H.P. MINI-TILLER–MODEL NO. D3217AR

MAIN FRAME

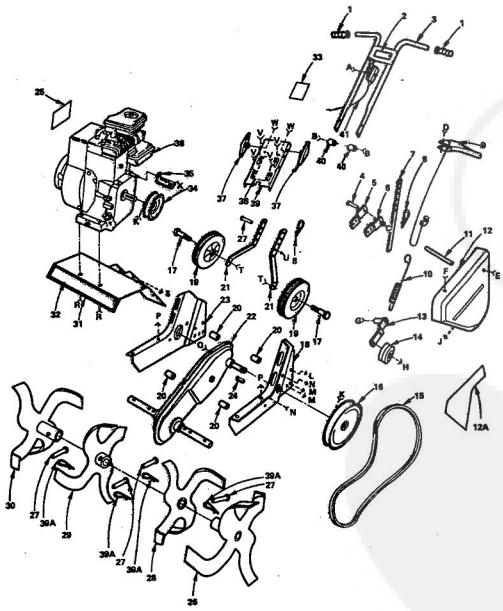

ROPER 3 H.P. MINI-TILLER–MODEL NO. D3217AR

MAIN FRAME

KEY NO.	PART NO.	DESCRIPTION
1	9266R	Handle Grip
2	9821R	Decal - Roper
3	674A47	Handle Weldment
4	9551R	Drilled Rivet
5	9192R	Drag Stake Bracket - R.H.
6	9191R	Drag Stake Bracket - L.H.
7	9193R	Drag Stake
8	4921H	Retainer Spring
9	674A49	Clutch Control Assembly
10	9241R	Spring
11	9271R	Split Spacer
12	9054R	Belt Guard
12A	9818R	Decal - Stripe
13	674A30	Idler Arm Weldment
14	9178R	Idler Pulley
15	9180R	V-Belt
16	9175R	Transmission Sheave
17	4898H	Shoulder Bolt
18	9062R	Engine Bracket - L.H.
19	9187R	Wheel
20	9173R	Split Spacer
21	9190R	Wheel Bracket
22	674A21	Transmission
23	9063R	Engine Bracket - R.H.
24	2949M	Sq. Key
25	9629R	Decal - Engine
26	674A40	Tine Weldment Outer - L.H.
27	4929H	Drilled Rivet
28	674A38	Tine Weldment Inner - L.H.
29	674A39	Tine Weldment Inner - R.H.
30	674A41	Tine Weldment Outer - R.H.
31	9056R	Tine Shield
32	9620R	Decal - Roper Mini-Tiller
33	9615R	Decal - Handle Panel
34	9177R	Engine Sheave
35	9184R	Belt Guard Bracket
36	80202	Engine, 3 H.P. Briggs and Stratton Type No. 0781-01
37	9210R	Knob
38	9225R	Decal - Instructions
39	9209R	Handle Panel
39A	3146R	Retainer Spring
40	9237R	Bushing - Handle Spacer
41	9214R	Throttle Control
42	3117P	*Fin. Hex Bolt 1/4 - 20 x 1 - 1/2
43	1605H	Gripco Center Lock Nut 1/4 - 20 UNC
44	3337P	Slotted Truss Hd. Bolt 5/16 - 18 x 3/4
45	1003P	*Lockwasher 5/16
46	504P	*Hex Nut 5/16 - 18 UNC
47	3342P	Fin. Hex Bolt 3/8 - 24 x 1 - 1/4 Gr. 5
48	7810H	Gripco Center Lock Nut 3/8 - 24 UNF
49	3013P	*Fin. Hex Bolt 5/16 - 18 x 1 - 1/2
50	1686H	Gripco Center Lock Nut 5/16 - 18
51	3338P	*Fin. Hex Bolt 1/4 - 20 x 5
52	1509P	Washer 9/32 x 5/8 x 16 Ga.
53	1002P	*Lockwasher 1/4
54	503P	*Hex Nut 1/4 - 20 UNC
55	10P	*Sq. Nk. Carriage Bolt 1/4 - 20 x 1/2
56	3343P	Fin. Hex Bolt Full Thd. 5/16 - 18 x 2
57	3025P	*Fin. Hex Bolt 3/8 - 16 x 1 - 1/4
58	508P	*Hex Jam Nut 3/8 - 16 UNC
59	4537P	*Hex Forged Socket Headless Set Screw C.P. 5/16 - 18 x 3/8
60	3017P	*Fin. Hex Bolt 5/16 - 18 x 2 - 1/2
61	3012P	*Fin. Hex Bolt 5/16 - 18 x 1 - 1/4
62	9239R	Push-On Speed Nut
64	3345P	Fin. Hex Bolt 1/4 - 28 x 3/4 Gr. 5
65	1584P	Washer 9/32 x 7/8 x 12 Ga.
66	1585P	Washer 9/32 x 1 - 1/4 x 16 Ga.
67	3347P	Fin. Hex Bolt 3/8 - 24 x 3 Gr. 5
68	1557P	Washer 13/32 x 13/16 x 11 Ga.
69	1004P	*Lockwasher 3/8
70	514P	Nylok Nut 3/8 - 16 UNC
71	1545P	Washer 17/32 x 1 x 16 Ga.
72	1511P	Washer 3/8 x 7/8 x 14 Ga.
73	16P	*Sq. Nk. Carriage Bolt 5/16 - 18 x 3/4
74	62P	*Sq. Nk. Carriage Bolt Sht. Shoulder 5/16 - 18 x 1 - 1/4
75	1410P	Heavy Internal Lockwasher Type A 5/16
76	3010P	*Fin. Hex Bolt 5/16 - 18 x 3/4
77	3011P	*Fin. Hex Bolt 5/16 - 18 x 1
---	9627R	Owners Manual

*STANDARD HARDWARE–PURCHASE LOCALLY

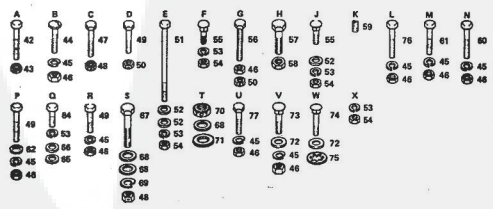

PDF Complete
Your complimentary use period has ended. Thank you for using PDF Complete.
Click Here to upgrade to Unlimited Pages and Expanded Features

ROPER 3 H.P. MINI-TILLER–MODEL NO. D3217AR
ENGINE–MODEL NUMBER 80202 TYPE 0781-01

CYLINDER & CRANKCASE

ALL ENGINE PARTS MUST BE PURCHASED THROUGH AND SERVICE PERFORMED BY YOUR LOCAL BRIGGS AND STRATTON DEALER.

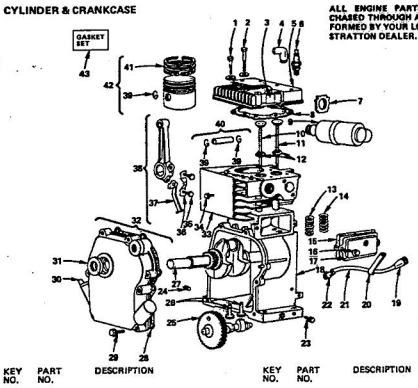

KEY NO.	PART NO.	DESCRIPTION
1	93111	Screw, Cylinder Head 1 - 15/16 L.
2	93113	Screw, Cylinder Head 2 - 5/16 L.
3	210812	Head, Cylinder
4	66538	Elbow, Spark Plug
5	220581	Cover, Cylinder Head
6	298909	Plug, Spark
7	91811	Locknut, Exhaust Elbow
8	27670	**Gasket, Cylinder Head
9	295905	Muffler, Exhaust
10	298676	Valve, Exhaust
11	298677	Valve, Intake
12	93312	Retainer, Valve Spring
13	29478	Spring, Exhaust Valve
14	260552	Spring, Intake Valve
15	27549	**Gasket, Valve Cover
16	93394	Screw, Breather Mtg.
17	294176	Breather, Valve Chamber
18	296561	Cylinder Ass'y.
19	67608	Grommet, Breather Tube
20	221278	Clamp, Breather Tube
21	230634	Tube, Breather
22	98678	Grommet, Breather Tube
23	93343	Screw, Tank Bracket Mtg.
24	91249	Plug, Pipe 1/4" Std. Sq. Hd.
25	210453	Gear, Cam
26	230173	Tappet, Valve
27	261298	Crankshaft
28	27586	**Gasket, Crankcase
29	93032	Screw, Crankcase Cover Mtg.
30	95788	Plug, Oil Filler
31	89660	Seal, Oil
32	294305	Cover Ass'y., Crankcase (Inc. Key No's. 28, 30 & 31)
33	220478	Shield, Cylinder
34	93042	Screw, Cylinder Shield Mtg.
35	92296	Screw, Connecting Rod
36	220756	Lock, Connecting Rod Screw
37	220670	Dipper, Connecting Rod
38	294367	Rod Ass'y., Connecting (Inc. Key No's. 36, 37 & 38)
39	26026	Lock, Piston Pin
40	298909	Pin Ass'y., Piston (Inc. Key No. 40)
41	294232	Ring Set, Piston
42	295587	Piston Ass'y. (Inc. Key No's. 40 & 42)
43	297275	Gasket Set

**INCLUDED IN GASKET SET NO. 297275

SPARK ARRESTING MUFFLER (OPTIONAL)

392811	Low Tone Muffler
392190	Spark Arrestor Ass'y. and Screws

ROPER 3 H.P. MINI-TILLER–MODEL NO. D3217AR
ENGINE–MODEL NUMBER 80202 TYPE 0781-01

CARBURETOR

ALL ENGINE PARTS MUST BE PURCHASED THROUGH AND SERVICE PERFORMED BY YOUR LOCAL BRIGGS AND STRATTON DEALER.

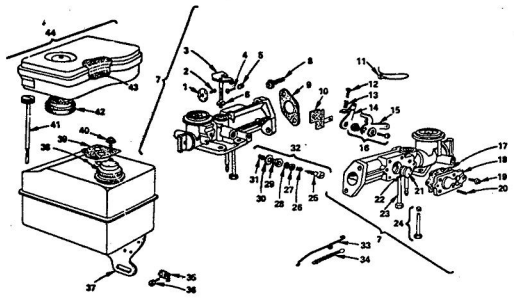

KEY NO.	PART NO.	DESCRIPTION
1	211203	Valve, Throttle
2	93499	Screw, Throttle Valve Mtg.
3	297961	Shaft & Lever, Throttle
4	92834	Screw, Rd. Hd. Machine
5	260575	Spring, Speed & Throttle Adj.
6	270167	Washer, Throttle Shaft
7	297903	Carburetor Ass'y. (Inc. Key No's. 1 thru 6, 17 thru 24 & 32)
8	93357	Screw, Hex Hd.
9	27355	*Gasket, Intake Elbow Mtg.
10	296110	Plate Ass'y., Stop Switch Insulator
11	391115	Wire, Ground
12	93350	Screw, Rd. Hd. Machine
13	260575	Spring, Speed & Throttle Adj.
14	220678	Lever, Speed Adjuster
15	221147	Crank, Bell
16	93177	Screw, Bell Crank
17	270026	Diaphragm
18	210959	Cover, Diaphragm
19	93141	Screw, Diaphragm Cover
20	93265	Pin, Diaphragm Cover
21	221377	Cap, Spring
22	260455	Spring, Fuel Pump Diaphragm
23	296811	Pipe, Plastic Fuel
24	391813	Fuel Pipe and Clip Ass'y.
25	23433	Valve, Needle
26	26336	Spring, Needle Valve
27	22235	Washer, Needle Valve
28	66978	Packing, Needle Valve
29	230590	Nut, Needle Valve
30	66594	Gasket, Needle Valve Nut
31	230591	Seat, Needle Valve
32	299060	Needle Valve Kit (Inc. Key No's. 25 thru 31)
33	260898	Link, Governor
34	260041	Spring, Air Vane Governor
35	221370	Clamp, Casing
36	93496	Screw, Sem
37	296591	Tank Ass'y., Fuel
38	392304	Cap, Fuel Tank
39	27911	*Gasket, Fuel Tank Mtg.
40	93341	Screw, Fuel Tank Mtg.
41	93322	Screw, Air Cleaner
42	27660	Gasket, Air Cleaner Mtg.
43	27987	Element, Air Cleaner
44	296766	Cleaner Ass'y., Air (Inc. Key No's. 42 & 43)

*INCLUDED IN GASKET SET NO. 297275

ROPER 3 H.P. MINI-TILLER–MODEL NO. D3217AR
ENGINE–MODEL NUMBER 80202 TYPE 0781-01

STARTER

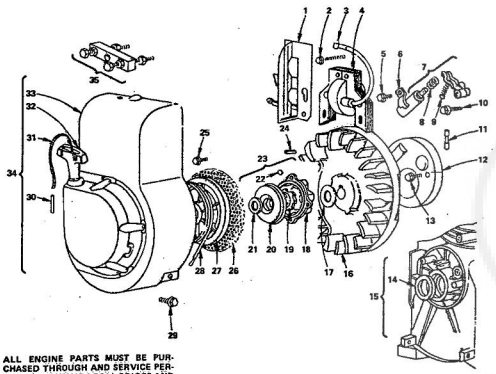

ALL ENGINE PARTS MUST BE PURCHASED THROUGH AND SERVICE PERFORMED BY YOUR LOCAL BRIGGS AND STRATTON DEALER.

KEY NO.	PART NO.	DESCRIPTION
1	297310	Blade, Governor
2	93381	Screw, Armature Mtg.
3	221798	Terminal, Cable
4	298502	Armature, Magneto
5	93042	Screw, Condenser Clamp Mtg.
6	220477	Clamp, Condenser
7	294628	Breaker Points & Condenser Set (Inc. Key No's. 8 & 9)
8	260374	Spring, Connector
9	28018	Spring, Breaker Arm
10	93381	Screw, Sem
11	66704	Plunger, Breaker Point
12	220366	Cover, Breaker Point & Condenser
13	93490	Screw, Dust Cover Mtg.
14	89660	Seal, Oil
15	296561	Cylinder Ass'y. (Inc. Key No. 14)
16	296684	Flywheel, Magneto
17	220865	Washer, Spring
18	211383	Housing, Starter Clutch
19	298436	Ratchet, Rewind Starter
20	221653	Washer, Clutch Retainer
21	68238	Washer, Ratchet Sealing
22	63770	Ball, Clutch
23	296310	Clutch Ass'y. (Inc. Key No's. 18, 19, 20, 21 & 22)
24	51760	Key, Flywheel
25	93705	Screw, Rotating Screen Mtg.
26	221661	Screen, Rotating
27	290117	Pulley, Rewind Starter
28	294303	Spring, Rewind Starter
29	93158	Screw, Sem
30	230228	Pin, Starter Grip
31	66994	Rope, Starter
32	66728	Grip, Starter Rope
33	294263	Housing, Blower
34	294259	Starter Ass'y, Rewind (Inc. Key No's. 27, 28, 30, 31, 32 & 33)
35	19069	Puller, Flywheel

PDF Complete
Your complimentary use period has ended. Thank you for using PDF Complete.
Click Here to upgrade to Unlimited Pages and Expanded Features

REPAIR PARTS 4 H.P. GIANT-TILLER--MODEL NO. D44152R1 5 H.P. GIANT-TILLER I--MODEL NO. D54252R1

Main Frame

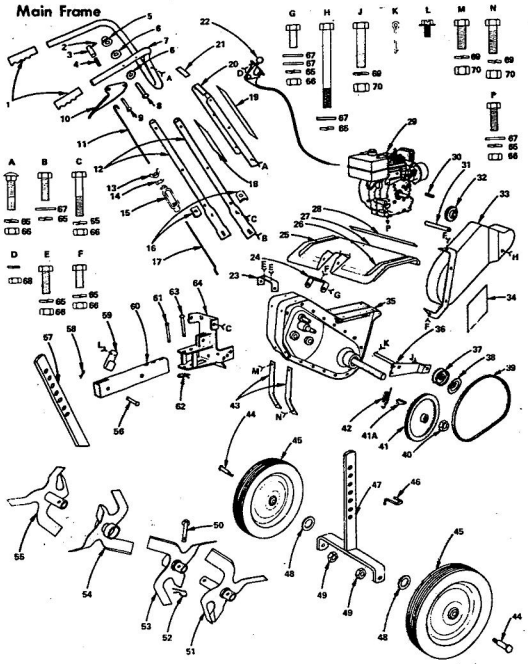

4 H.P. GIANT-TILLER--MODEL NO. D44152R1 5 H.P. GIANT-TILLER I--MODEL NO. D54252R1

Main Frame

KEY NO.	PART NO.	DESCRIPTION
1	624A78	Handle Grip (Set of 2)
2	4920H	Roll Pin
3	4837H	Latch Button
4	4922H	Latch Spring
5	4946H	Pal Nut
6	1509P	*Washer 5/16 x 3/4 x 16 Ga.
7	7118R	Handle Bar
8	2006P	R.H. Rivet 1/4 x 1 - 5/8
9	4888H	Latch Pin 1/4 x 3 - 1/2
10	7123R	Clutch Control Lever
11	7142R	Clutch Rod-Upper
12	7117R	Handle
13	3789F	*Wing Nut No. 10 -24
14	1006P	*Lockwasher No. 10
15	4899H	Turnbuckle
16	8630H	Clamp Washer
17	4900H	Clutch Rod-Lower
18	8093R	Instruction Decal (D54252R1 only)
18	8094R	Instruction Decal (D44152R1 only)
19	8092R	Decal (D54252R1 only)
19	7570R	Decal (D44152R1 only)
20	6832R	Handle Plate
21	7088R	Caution Decal (D54252R1 only)
22	7143R	Throttle Control
23	7134R	Idler Arm Support
24	7137R	Tine Shield Support
25	7571R	Decal - L.H. (D54252R1 only)
26	7572R	Decal - R.H. (D54252R1 only)
27	7125R	Tine Shield
28	7148R	Decal (D54252R1 only)
28	7131R	Decal (D44152R1 only)
29	670A39	Engine - 5 H.P. (D54252R1 only)
29	670A38	Engine - 4 H.P. (D44152R1 only)
30	2649M	Square Key
31	7114R	Spacer
32	1317R	Engine Pulley
33	670A16	Belt Guard Assembly
34	7151R	Decal - 5 H.P. (D54252R1 only)
34	7378R	Decal - 4 H.P. (D44152R1 only)
35	670A23	Transmission (D54252R1 only)
35	670A29	Transmission (D44152R1 only)
36	670A14	Idler Arm Assembly
37	4933H	Idler Pulley
38	7120R	Idler Stop Washer
39	7140R	V-Belt
40	820H	*Locknut 1/2 - 20 UNF
41	7141R	Input Pulley
41A	8859H1	Woodruff Key
42	7153R	Spring
43	7135R	Reinforcement
44	4898H	Shoulder Bolt
45	3148R	Wheel
46	7085R	Wheel Support Pin
47	670A33	Gage Wheel Support
48	1567P	*Washer 13/32 x 13/16 x 11 Ga.
48	514P	*Nylok Nut 3/8 - 16 UNC
50	4829H	Dr. Pan Hd. Rivet 3/8 x 1 - 3/4
51	624A47	Tine Assembly R.H. Outer - 13"
52	3146A	Retainer Spring
53	624A45	Tine Assembly R.H. Inner - 13"
54	624A44	Tine Assembly L.H. Inner - 13"
55	624A46	Tine Assembly L.H. Outer - 13"
56	7156R	Dr. Pan Hd. Rivet 3/8 x 2 - 1/4
57	8256H	Drag Stake
58	4921H	Retainer Spring
59	8081R	Stake Spring
60	624A80	Stake Support and Spring (Inc. 59 and L)
61	2007P	R.H. Rivet 3/8 x 3
62	4928H	Retainer Spring
63	488DH	Dr. R.H. Rivet 1/2 x 3 - 1/4
64	670A34	Wheel and Handle Support Assembly
65	1003P	*Lockwasher 5/16
66	504P	*Hex Nut 5/16 - 18 UNC
67	1611P	*Washer 3/8 x 7/8 x 14 Ga.
68	503P	*Hex Nut 1/4 - 20 UNC
69	1004P	*Lockwasher 3/8
70	501P	*Hex Nut 3/8 - 16 UNC
A	57P	*Sq. Neck Carriage Bolt - Short Shoulder 5/16 - 18 UNC x 1 - 1/2
B	3010P	*Hex Bolt 5/16 - 18 UNC x 3/4
C	3014P	*Hex Bolt 5/16 - 18 x 1 - 3/4
D	1002P	*Lockwasher 1/4
E	3011P	*Hex Bolt 5/16 - 18 UNC x 1
F	3010P	*Hex Bolt 5/16 - 18 UNC x 3/4
G	3010P	*Hex Bolt 5/16 - 18 UNC x 3/4
H	3313P	*Hex Bolt 5/16 - 24 UNF x 3 - 1/2
J	3028P	*Hex Bolt 3/8 - 16 UNC x 1 - 3/4
K	2511P	*Cotter Pin 3/16 x 1
L	5614P	*Slotted Hex Washer Hd. Thrd. Cutting Screw - Type 1, 1/4 - 20 UNC x 1/2
M	3023P	*Hex Bolt 3/8 - 16 UNC x 1
N	3025P	*Hex Bolt 3/8 - 16 UNC x 1 - 1/4
P	3008P	*Hex Bolt 5/16 - 18 UNC x 1-1/2
--	8503R	Owners Manual

*STANDARD HARDWARE--PURCHASE LOCALLY

4 H.P. GIANT-TILLER--MODEL NO. D44152R1

Transmission

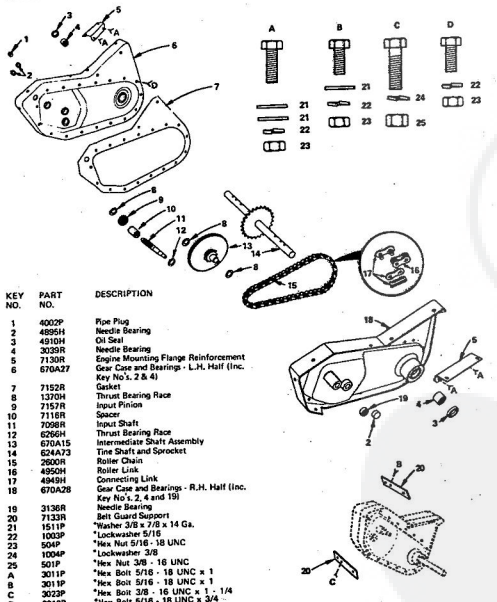

KEY NO.	PART NO.	DESCRIPTION
1	4002P	Pipe Plug
2	4895H	Needle Bearing
3	4910H	Oil Seal
4	3039R	Needle Bearing
5	7130R	Engine Mounting Flange Reinforcement
6	670A27	Gear Case and Bearings - L.H. Half (Inc. Key No's. 2 & 4)
7	7152R	Gasket
8	1370H	Thrust Bearing Race
9	7157R	Input Pinion
10	7116R	Spacer
11	7098R	Input Shaft
12	6266H	Thrust Bearing Race
13	670A15	Intermediate Shaft Assembly
14	624A73	Tine Shaft and Sprocket
15	2600R	Roller Chain
16	4950H	Roller Link
17	4949H	Connecting Link
18	670A28	Gear Case and Bearings - R.H. Half (Inc. Key No's. 2, 4 and 19)
19	3136R	Needle Bearing
20	7133R	Belt Guard Support
21	1511P	*Washer 3/8 x 7/8 x 14 Ga.
22	1003P	*Lockwasher 5/16
23	504P	*Hex Nut 5/16 - 18 UNC
24	1004P	*Lockwasher 3/8
25	501P	*Hex Nut 3/8 - 16 UNC
A	3011P	*Hex Bolt 5/16 - 18 UNC x 1
B	3011P	*Hex Bolt 5/16 - 18 UNC x 1
C	3022P	*Hex Bolt 3/8 - 16 UNC x 1 - 1/4
D	3010P	*Hex Bolt 5/16 - 18 UNC x 3/4

*STANDARD HARDWARE--PURCHASE LOCALLY

5 H.P. GIANT-TILLER I--MODEL NO. D54252R1

Transmission

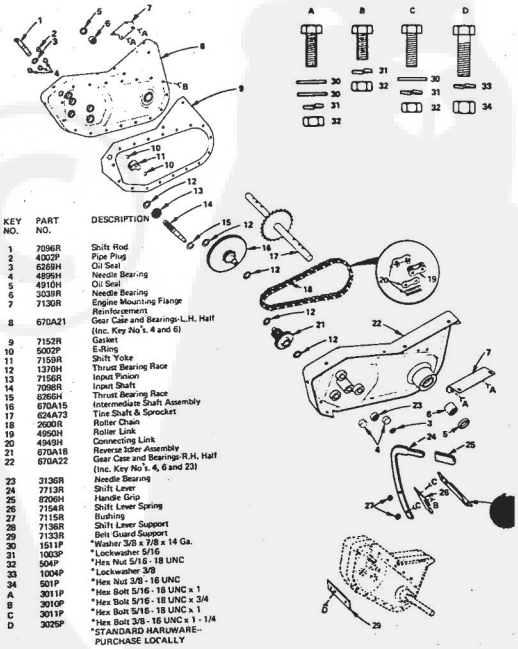

KEY NO.	PART NO.	DESCRIPTION
1	7096R	Shift Rod
2	4002P	Pipe Plug
3	6269H	Oil Seal
4	4895H	Needle Bearing
5	4910H	Oil Seal
6	3039R	Needle Bearing
7	7130R	Engine Mounting Flange Reinforcement
8	670A21	Gear Case and Bearings-L.H. Half (Inc. Key No's. 4 and 6)
9	7152R	Gasket
10	5002P	E-Ring
11	7159R	Shift Yoke
12	1370H	Thrust Bearing Race
13	7156R	Input Pinion
14	7098R	Input Shaft
15	6266H	Thrust Bearing Race
16	670A15	Intermediate Shaft Assembly
17	624A73	Tine Shaft & Sprocket
18	2600R	Roller Chain
19	4950H	Roller Link
20	4949H	Connecting Link
21	670A18	Reverse Idler Assembly
22	670A22	Gear Case and Bearings-R.H. Half (Inc. Key No's. 4, 6 and 23)
23	3136R	Needle Bearing
24	7713R	Shift Lever
25	8206H	Handle Grip
26	7154R	Shift Lever Spring
27	7115R	Bushing
28	7136R	Shift Lever Support
29	7133R	Belt Guard Support
30	1511P	*Washer 3/8 x 7/8 x 14 Ga.
31	1003P	*Lockwasher 5/16
32	504P	*Hex Nut 5/16 - 18 UNC
33	1004P	*Lockwasher 3/8
34	501P	*Hex Nut 3/8 - 16 UNC
A	3011P	*Hex Bolt 5/16 - 18 UNC x 1
B	3010P	*Hex Bolt 5/16 - 18 UNC x 3/4
C	3011P	*Hex Bolt 5/16 - 18 UNC x 1
D	3025P	*Hex Bolt 3/8 - 16 UNC x 1 - 1/4

*STANDARD HARDWARE--PURCHASE LOCALLY

PDF Complete
Your complimentary use period has ended. Thank you for using PDF Complete.
Click Here to upgrade to Unlimited Pages and Expanded Features

4 H.P. GIANT-TILLER--MODEL NO. D44152R1

Engine

TECUMSEH 4 H.P. ENGINE--MODEL NO. HS40-55485G

ALL ENGINE PARTS MUST BE PURCHASED THROUGH AND SERVICE PERFORMED BY YOUR LOCAL TECUMSEH DEALER.

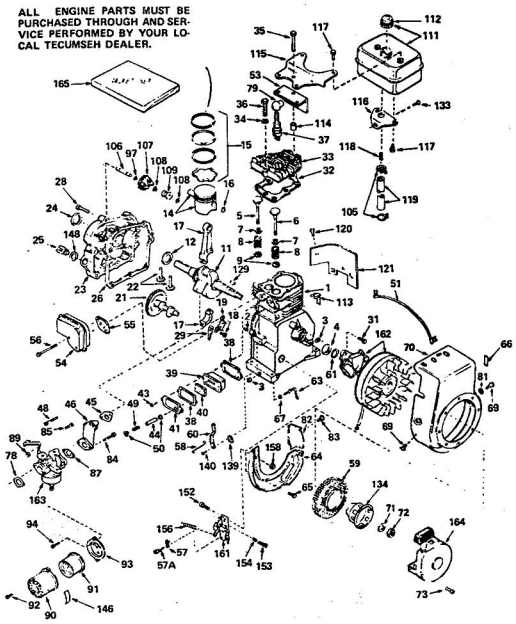

KEY NO.	PART NO.	DESCRIPTION
1	33014A	Cylinder Assy. (Incl. No's. 2, 3 & 4)
2	26727	Pin, Dowel
3	27642	Plug, Sq. Hd. Pipe (Oil Drain)
4	32600	Seal, Oil
5	32644	Valve, Intake (Std.) (Incl. No's. 7, 8 & 9)
5	32645	Valve, Intake (1/32" Oversize) (Incl. No's. 7, 8 &9)
6	293138	Valve, Exhaust (Std.) (Incl. No's. 7, 8 & 9)
6	293158	Valve, Exhaust (1/32" Oversize) (Incl. No's. 7, 8 & 9)
7	31671	Cap, Upper Valve Spring
8	31672	Spring, Valve
9	31673	Cap, Lower Valve Spring
11	32877A	Crankshaft Assy.
12	32323	Washer, Thrust
14	32603	Piston & Pin Assy. (Incl. 2 of No. 16) (Std.)
14	32604	Piston & Pin Assy. (Incl. 2 of No. 16) (.010 Oversize)
14	32605	Piston & Pin Assy. (Incl. 2 of No. 16) (.020 Oversize)
15	32606	Ring Set, Piston (Std.)
15	32607	Ring Set, Piston (.010 Oversize)
15	32608	Ring Set, Piston (.020 Oversize)
16	20381	Ring, Piston Pin Retaining
17	32875	Rod Assy., Connecting (Incl. No's. 18 19 and 29)
18	32610	Screw, Connecting Rod
19	32609	Plate, Lock
21	33158	Camshaft (Compression Release)
22	27241	Lifter, Valve
23	32700A	Cover, Cylinder (Incl. No's. 24, 25, 106 & 148)
24	27897	Seal, Oil
25	27625	Plug, Oil Filler (Incl. No. 148)
26	27677	Gasket, Cylinder Cover
28	30564	Screw, Hex Hd. Cap Sems, 1/4 - 20 x 1
29	32654	Dipper, Oil
31	650489	Screw, Hex Hd. Sems, w/flatwasher, 1/4 - 20 x 5/8
32	*33015	Gasket, Cylinder Head
33	33016	Head, Cylinder
34	26073	Washer
35	650694	Screw, Hex Hd. Cap, 5/16 - 18 x 2
36	6021	Screw, Hex Hd. Cap, 5/16 - 18 x 1 - 1/2
37	33636	Plug, Spark (Champion J-8 or Equivalent)
38	27234	Gasket, Valve Spring Cover
39	27566	Body, Breather
40	27233	Element, Breather
41	34146	Cover, Valve Spring
43	650128	Screw, Fil Slotted Hd. Sems, 10 - 24 x 1/2
44	32447	Tube, Breather
45	*32649	Gasket, Intake Pipe
46	32699	Pipe, Intake
48	30646	Screw, Phil. Fil. Hd. Sems, 1/4 - 20 x 1 - 3/8
49	34148	Spring, Coil
50	32446	Grommet, Breather Tube
51	31388	Wire, Ground
53	33344	Baffle, Heat
54	32712	Muffler
55	*26754	Gasket, Exhaust
56	650253	Screw, Hex Hd. Cap, 1/4 - 20 x 2 - 1/4
57	27793	Clip, Conduit
57A	28942	Screw, Hex Slotted Hd. Sems, 10 - 32 x 3/8
58	32698	Link, Governor-to-throttle
59	33668	Screen, Starter
60	31510	Lever, Governor
61	33876	Gasket, Stator
63	31334	Rod, Governor
64	**33342	Baffle, Blower Housing
65	650561	Screw, Phil. Hex Hd. Sems, 1/4 - 20 x 5/8
66	34149	Decal, Name & Instruction
67	28277	Washer, Flat
69	29212	Screw, Hex Hd. Sems, 1/4 - 28 x 7/16
70	+33663A	Housing, Blower
71	650763	Washer, Belleville
72	650607	Nut, Hex
73	+29716	Screw, Phil. Pan Hd. Sems, 1/4 - 28 x 7/16
78	*27272	Gasket, Air Cleaner
79	610118	Cover, Spark Plug
81	650688	Washer, Flat
82	33341	Extension, Baffle
83	650701	Screw, Phil. Hex Washer Hd. Self-Drilling, 8 - 18 x 7/16
84	6202	Screw, Hex Hd. Cap, 1/4 - 28 x 1
85	650601	Screw, Phil. Fil. Hd., 1/4 - 28 x 2
87	*26756	Gasket, Carburetor
89	29752	Nut & Lockwasher Assy., 1/4 - 28
90	31692	Body, Air Cleaner
91	31700	Element, Air Cleaner
92	650152	Screw, Fil. Slotted Hd. Sems, 8 - 32 x 3/8
93	34147	Bracket, Air Cleaner
94	28820	Screw, Phil. Fil. Hd. Mach. Sems, 10 -32 x 1/2
97	30590A	Washer, Flat
105	26460	Clamp, Fuel Line
106	30574	Shaft, Mechanical Governor
107	30691	Gear Assy., Governor (Incl. No. 97)
108	29193	Ring, Retaining
109	30588A	Spool, Governor
111	33120	Tank Assy., Fuel (Incl. No. 112 & 117)
112	4101448	Cap, Fuel Tank
113	29443	Clip, Fuel Line
114	28212	Spacer, Tank Bracket
115	28317A	Bracket, Fuel Tank - Upper
116	32762	Bracket, Fuel Tank - Lower
117	650655	Screw, Hex Hd. Sems, 1/4 - 14 x 7/8
118	28819	Spring, Fuel Line
119	30705	Line, Fuel
120	650128	Screw, Fil. Slotted Hd. Sems, 10 -24 x 1/2

4 H.P. GIANT-TILLER--MODEL NO. D44152R1

Engine

TECUMSEH 4 H.P. ENGINE--MODEL NO. HS40-55485G

KEY NO.	PART NO.	DESCRIPTION
121	29745	Extension, Blower Housing
129	610951	Key, Flywheel
133	650561	Screw, Phil. Hex Hd. Sems, 1/4 - 20 x 5/8
134	33667	Cup, Starter
139	31335	Clamp, Governor Lever
140	650548	Screw, Hex Slotted Washer Hd., 8 - 32 x 3/8
146	31871	Decal, Air Cleaner
148	*29673	Gasket, Oil Fill
152	**30091	Screw, Hex Slotted Washer Hd. Sems, 8 - 32 x 1/2
153	650549	Screw, Fil. Slotted Hd. Mach., 5 - 40 x 7 /16
154	31342	Spring, Compression
156	31426	Spring, Extension
158	**30322	Nut & Lockwasher Assy., 8 - 32
161	**33879	Control Assy., Speed (Incl. No's. 152, 153, 154 & 158)
162	610942A	Magneto (The complete magneto is not available as an assembly. The magneto number is shown for reference purposes only. Order component parts individually, as shown in parts list.)
163	631918	Carburetor (Incl. No. 87)
164	+590420	Starter Assy., Rewind
165	33240	Gasket Set (Incl. Items Marked *)

**In original production the speed control assembly is riveted to the blower housing baffle. Replacement speed control assembly includes screws and nuts for mounting. Replacement baffle has threaded holes.

+In original production the starter is riveted to the blower housing. If either the starter or blower housing requires replacement, both will have to be ordered. Also order four (4) screws illustrated to attach replacement starter to replacement blower housing.

4 H.P. GIANT-TILLER--MODEL NO. D44152R1
5 H.P. GIANT-TILLER I--MODEL NO. D54252R1

Carburetor

NO. 631918 FOR TECUMSEH 4 H.P. ENGINE--MODEL NO. HS40-55485G
NO. 631923 FOR TECUMSEH 5 H.P. ENGINE--MODEL NO. HS50-67112C

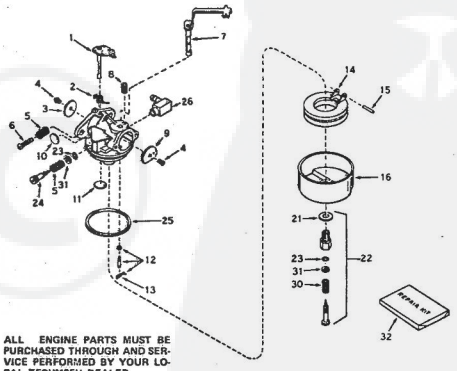

ALL ENGINE PARTS MUST BE PURCHASED THROUGH AND SERVICE PERFORMED BY YOUR LOCAL TECUMSEH DEALER.

KEY NO.	PART NO.	DESCRIPTION
1	631615	Shaft & Lever Assy., Throttle
2	631279	Spring, Throttle Return
3	631036	Shutter, Throttle
4	692506	Screw, 4 - 40 x 3/16
5	630766	Spring, Idle Regulating Screw
6	650417	Screw, Idle Regulating
7	630919	Shaft & Lever Assy., Choke
8	630735	Spring, Choke Stop
9	31837	Shutter, Choke
10	*630748	Plug, Welch
11	*631027	Plug, Welch
12	*631021	Inlet Needle, Seat & Clip Assy., (Incl. No. 13)
13	631022	Clip, Inlet Needle
14	631023	Float, Carburetor
15	*631024	Shaft, Float
16	631867	Bowl, Float
21	27110	Gasket, Bowl-to-body
22	*31839	Adjustment Screw Assy., Main (Incl. No's. 21, 23, 30 & 31)
23	*630740	"O" Ring, Adjustment Screw
24	*631078	Screw, Idle Adjustment
25	*631028	Gasket, Bowl-to-body
26	631807	Fitting, Fuel Inlet
30	630738	Spring, Main Adjustment Screw
31	630739	Washer, Flat
32	31840	Repair Kit (Incl. Items Marked *)

PDF Complete
Your complimentary use period has ended. Thank you for using PDF Complete.
Click Here to upgrade to Unlimited Pages and Expanded Features

5 H.P. GIANT-TILLER I--MODEL NO. D54252R1

TECUMSEH 5 H.P. ENGINE--MODEL NO. HS50-67112C

Engine

ALL ENGINE PARTS MUST BE PURCHASED THROUGH AND SERVICE PERFORMED BY YOUR LOCAL TECUMSEH DEALER.

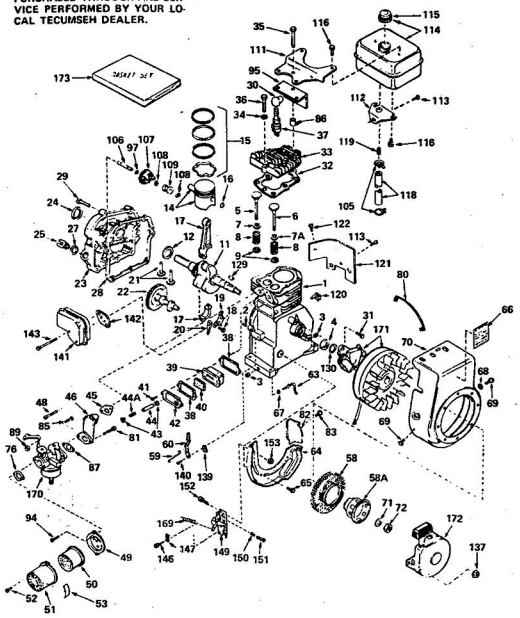

5 H.P. GIANT-TILLER I--MODEL NO. D54252R1

TECUMSEH 5 H.P. ENGINE--MODEL NO. HS 50-67112C

Engine

KEY NO.	PART NO.	DESCRIPTION
1	33674	Cylinder Assy. (Incl. No's. 2, 3 & 4)
2	26727	Pin, Dowel
3	27942	Plug, Sq. Hd. Pipe, 1/4 - 18 (Oil Drain)
4	32600	Seal, Oil
5	32644	Valve, Intake (Std.) (Incl. No's 7, 8 & 9)
5	32645	Valve, Intake (1/32" Oversize) (Incl. No's 7, 8 & 9)
6	293138	Valve, Exhaust (Std.) (Incl. No's. 7A, 8 & 9)
6	293158	Valve, Exhaust (1/32" Oversize) (Incl. No's. 7A, 8 & 9)
7	31671	Cap, Upper Valve Spring (Intake)
7A	33678	Cap, Upper Valve Spring (Exhaust)
8	31672	Spring, Valve
9	31673	Cap, Lower Valve Spring
11	33677	Crankshaft
12	32323	Washer, Thrust
14	33562	Piston & Pin Assy. (Std.) (Incl.2 of No. 16)
14	33563	Piston & Pin Assy. (.010 Oversize) (Incl. 2 of No. 16)
14	33564	Piston & Pin Assy. (.020 Oversize) (Incl. 2 of No. 16)
15	33567	Ring Set, Piston (Std.)
15	33568	Ring Set, Piston (.010 Oversize)
15	33569	Ring Set, Piston (.020 Oversize)
16	20381	Ring, Piston Pin Retaining
17	33661	Rod Assy., Connecting (Incl. No's. 18, 19 & 20)
18	32610	Screw, Connecting Rod
19	32609	Plate, Lock
20	32654	Dipper, Oil
21	27241	Lifter, Valve
22	33158	Camshaft (Compression Release)
23	32700A	Cover, Cylinder (Incl. No's. 24, 25, 27 & 106)
24	27897	Seal, Oil
25	27625	Plug, Oil Filler (Incl. No. 27)
27	*29673	Gasket, Oil Filler
28	*27677	Gasket, Cylinder Cover
29	30564	Screw & Lockwasher, Hex Hd. Cap, 1/4 - 20 x 1
30	610118	Cover, Spark Plug
31	650489	Screw, Hex Hd. Sems w/Flatwasher, 1/4 - 20 x 5/8
32	*33554	Gasket, Cylinder Head
33	33016	Head, Cylinder
34	26073	Washer
35	650694	Screw, Hex Hd. Cap, 5/16 - 18 x 2
36	6021	Screw, Hex Hd. Cap, 5/16 - 18 x 1 - 1/2
37	33636	Plug, Spark (Champion J-8 or equivalent)
38	27234	Gasket, Breather Cover
39	27666	Body Assy., Breather
40	27233	Element, Breather
41	650128	Screw, Fil. Slotted Hd. Sems, 10 - 24 x 1/2
42	34146	Cover, Valve Spring
43	32446	Grommet, Breather Tube
44	32447	Tube, Breather
44A	34148	Spring, Coil
45	*33673	Gasket, Intake
46	33666	Pipe, Intake
48	30646	Screw, Phil. Fil. Hd. Sems, 1/4 - 20 x 1 - 3/8
49	34147	Bracket, Air Cleaner
50	31700	Element, Air Cleaner
51	31892	Body, Air Cleaner
52	650152	Screw, Fil. Slotted Hd. Sems, 8 - 32 x 3/8
53	31871	Decal, Air Cleaner
58	33668	Screen, Starter Cup
58A	33667	Cup, Starter
59	32698	Link, Governor-to-throttle
60	31510	Lever, Governor
63	31334	Rod, Governor
64	*33342	Baffle, Blower Housing
65	650561	Screw, Phil. Hex Hd. Sems, 1/4 - 20 x 5/8
66	34149	Decal, Name & Instruction
67	28277	Washer, Flat
68	650168	Washer, Flat 1/4
69	29212	Screw, Hex Hd. Sems, 1/4 - 28 x 7/16
70	**33663A	Housing, Blower
71	650763	Washer, Belleville
72	650807	Nut, Flywheel
78	*27272	Gasket, Air Cleaner
80	31388	Wire, Ground
81	6202	Screw, Hex Hd. Cap, 1/4 - 28 x 1
82	33341	Extension, Baffle
83	650701	Screw, Phil. Hex Washer Hd. Self-Drilling, 8 - 18 x 7/16
85	650601	Screw, Phil. Fil. Hd., 1/4 - 28 x 2
86	28212	Spacer
87	*26756	Gasket, Carburetor
89	29752	Nut & Lockwasher., 1/4 - 28
94	28820	Screw, Phil. Fil. Hd. Mach. Sems, 10 - 32 x 1/2
95	33344	Baffle, Heat
97	30590A	Washer, Flat
105	26450	Clamp, Fuel Line
106	30574	Shaft, Mechanical Governor
107	30591	Gear Assy., Governor (Incl. No. 97)
108	29193	Ring, Retaining
109	30588A	Spool, Governor
111	28371A	Bracket, Fuel Tank - Upper
112	32762	Bracket, Fuel Tank - Lower
113	650561	Screw, Phil. Hex Hd. Sems, 1/4 - 20 x 5/8
114	33120	Tank Assy., Fuel (Incl. No's. 115 & 116)
115	410144B	Cap, Fuel
116	650665	Screw, Hex Hd. Sems, 1/4 - 14 x 7/8
118	30705	Line, Fuel
119	28819	Spring, Fuel Line
120	29443	Clip, Fuel Line
121	29745	Extension, Blower Housing
122	650128	Screw, Fil. Slotted Hd. Sems, 10 - 24 x 1/2
129	610951	Key, Flywheel
130	33876	Gasket, Stator
137	*29752	Nut & Lockwasher Assy., 1/4 - 28
139	31335	Clamp, Governor Lever
140	650548	Screw, Hex Slotted Washer Hd., 8 - 32 x 3/8
141	33671	Muffler
142	*33670	Gasket, Muffler
143	650253	Screw, Hex Hd. Cap, 1/4 - 20 x 2 - 1/4

5 H.P. GIANT-TILLER I--MODEL NO. D54252R1

TECUMSEH 5 H.P. ENGINE--MODEL NO. HS50-67112C

Engine

KEY NO.	PART NO.	DESCRIPTION
146	28942	Screw, Hex Slotted Hd. Sems, 10 - 32 x 3/8
147	27793	Clip, Conduit
149	+33879	Control Assy., Speed (Incl. No's. 150 thru 153)
150	31342	Spring, Compression
151	650549	Screw, Fil. Slotted Hd. Mach., 5 - 40 x 7/16
152	+30091	Screw, Hex Slotted Washer Hd. Sems, 8 - 32 x 1/2
153	+30322	Nut, Lock, 8 - 32
169	31426	Spring, Extension
170	631923	Carburetor (Incl. No. 87,
171	610942A	Magneto (The complete magneto is not available as an assembly. The magneto number is shown for reference purposes only. Order component parts individually, as shown in parts list.)
172	**590420	Starter, Rewind
173	33683	Gasket Set (Incl. items marked *)

+In original production the speed control assembly is riveted to the blower housing baffle. Replacement speed control assembly includes screws and nuts for mounting. Replacement baffle has threaded holes.

**In original production the starter is riveted to the blower housing. If either the starter or blower housing requires replacement, both will have to be ordered. Also order four (4) nuts illustrated to attach replacement starter to replacement blower housing.

4 H.P. GIANT--TILLER --MODEL NO. D44152R1
5 H.P. GIANT--TILLER I--MODEL NO. D54252R1

*Magneto No. 610942A

TECUMSEH 4 H.P. ENGINE--MODEL NO. HS40-55485G
TECUMSEH 5 H.P. ENGINE--MODEL NO. HS50-67112C

ALL ENGINE PARTS MUST BE PURCHASED THROUGH AND SERVICE PERFORMED BY YOUR LOCAL TECUMSEH DEALER.

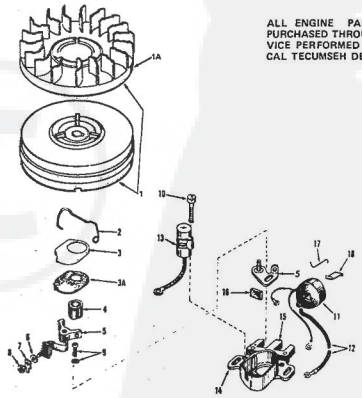

KEY NO.	PART NO.	DESCRIPTION
1	336998	Flywheel (Incl. Nos. 1A, 3 & 3A)
1A	610933	Fan, Blower
2	30551	Spring, Breaker box dust cover
3	610947	Cover, Dust
3A	610950	Gasket, Dust cover
4	30992	Cam, Breaker
5	30547A	Contact Assy., Breaker
6	610385	Washer, Terminal
7	33356	Tab, Ground terminal
8	610408	Nut, Terminal
9	29181	Screw & Washer, Breaker
10	610593	Screw, Condenser
11	30560A	Coil Assy. (Incl. No. 12)
12	30554	Wire, Lead
13	30548A	Condenser
14	30545	Core & Plate
15	30561B	Stator Assy. (Incl. Nos. 2, 3, 3A, 5 thru 14 & 16 thru 18)
16	30549	Felt, Cam wiper
17	31311	Clip, Coil locking
18	29629	Spring, Coil wedge

*The complete magneto is not available as an assembly. The magneto number is shown for reference purposes only. Order component parts individually, as shown in parts list

PDF Complete
Your complimentary use period has ended. Thank you for using PDF Complete.
Click Here to upgrade to Unlimited Pages and Expanded Features

4 H.P. GIANT-TILLER--MODEL NO. D44152R1
5 H.P. GIANT-TILLER I--MODEL NO. D54252R1

Rewind Starter No. 590420

TECUMSEH 4 H.P. ENGINE--MODEL NO. HS40-55485G
TECUMSEH 5 H.P. ENGINE--MODEL NO. HS50-67112C

ALL ENGINE PARTS MUST BE PURCHASED THROUGH AND SERVICE PERFORMED BY YOUR LOCAL TECUMSEH DEALER.

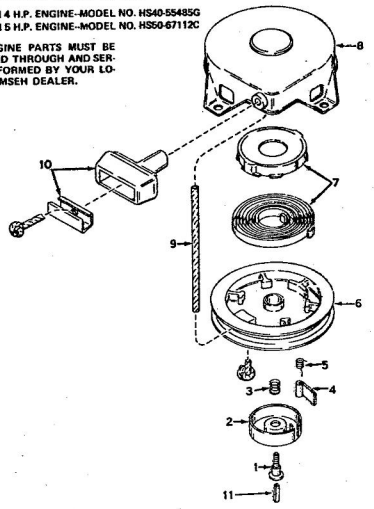

KEY NO.	PART NO.	DESCRIPTION
1	590409	Screw, Retainer
2	590410	retainer, R.H.
3	590411	Spring, Brake
4	590448	Dog, Starter
5	590412	Spring, R.H. Dog
6	590413A	Pulley
7	590414	Spring & Keeper Assy.
8	590415	Housing Assy., Starter
9	590386	Rope, Starter
10	590387	Handle Assy., Starter
11	590459	Pin, Centering

REPAIR PARTS

GIANT-TILLER MODEL NO. D84351R1

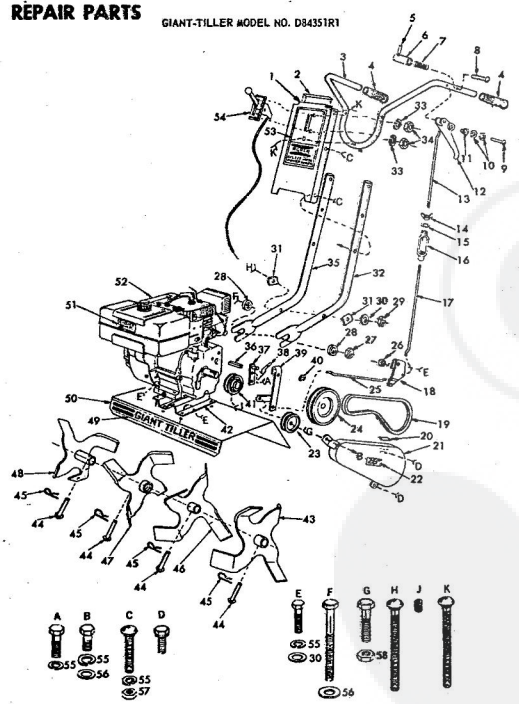

GIANT-TILLER MODEL NO. D84351R1

KEY NO.	PART NO.	DESCRIPTION
1	6832R	Handle Plate
2	7088R	Caution Decal
3	6833R	Handle Bar
4	8275H	Handle Grip
5	4920H	Roll Pin
6	4837H	Latch Button
7	4922H	Spring
8	4888H	Drilled Rivet R.H.
9	7006P	Rivet R.H. ⅝x 1-5/8
10	1509P	Washer 5/16x⅞x16 Ga.
11	4946H	Pal Nut
12	4873H	Clutch Control Lever
13	8755H	Clutch Rod-Upper
14	3789F	Wing Nut
15	1006P	Lockwasher No. 10
16	4899H	Turnbuckle
17	4900H	Clutch Rod-Lower
18	4884H	Belt Crank
19	4897H1	V-Belt
20	7032R	Shift Label
21	624A13A	Belt Guard & Bracket
22	7036R	Scotchcal (28")
23	4933H	Idler Pulley
24	4902H	Input Sheave
25	4902H	Clutch Rod Link
26	4917H	Bushing
27	1685H	Locknut 5/16-18
28	7850H	Spacer Washer
29	532P	Keps Nut 5/16-18
30	1556P	Washer 13/32x7/8x14 Ga.
31	8630H	Clamp Washer
32	6834R	Handle L.H.
33	1002P	Lockwasher ¼
34	303P	Hex Nut ¼-20
35	6835R	Handle R.H.
36	4914H	Square Key
37	624A12	Idler Arm Support & P
38	6845R	Idler Spring
39	624A11	Idler Arm & Strap
40	5015P	E-Ring
41	4931H	Engine Sheave
42	6922R	Adapter Plate
43	624A61	Tine Assembly-L.H. O
44	4929H	Drilled Rivet, Pan Hd.
45	3146H	Retainer Spring
46	624A59	Tine Assembly L.H. In
47	624A60	Tine Assembly R.H. In
48	624A62	Tine Assembly R.H. O
49	7035R	Scotchcal (Giant-Tiller
50	3132R	Tine Shield
51	7034R	Scotchcal (8 H.P.)
52	624A75	Engine Lawson 8 H.P. No. 155107A
53	7033R	Scotchcal (Roper)
54	8269H	Throttle Control with Cable
55	1003P	Lockwasher 5/16
56	1537P	Washer 11/32x11/16 x
57	504P	Hex Nut 5/16-18
58	508P	Hex Jam Nut 3/8-16
A	3054P	Hex Bolt 5/16-24x¾
B	3053P	Hex Bolt 5/16-24x5/8
C	58P	Carriage Bolt, Short Sh 5/16-18x2
D	6024P	Hex Bolt 5/16-18x¾
E	3013P	Hex Bolt 5/16-18x1¼
F	3018P	Hex Bolt 5/16-18x6
G	3027P	Hex Bolt 3/8-16x1½
H	18P	Carriage Bolt 5/16-18x
J	4531P	Set Screw, Hex Socket, Hdless, C.P. 5/16-18x
K	57P	Carriage Bolt, Short Sh 5/16-18x1½

PDF Complete
Your complimentary use period has ended. Thank you for using PDF Complete.
Click Here to upgrade to Unlimited Pages and Expanded Features

GIANT-TILLER MODEL NO. D84351R1

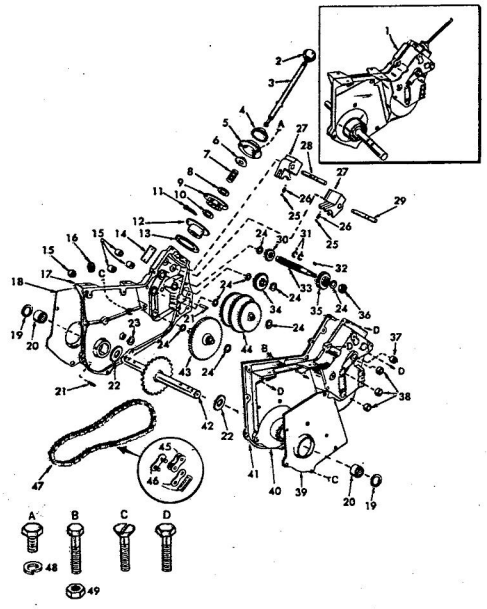

GIANT-TILLER MODEL NO. D84351R1

KEY NO.	PART NO.	DESCRIPTION
1	624A58	Transmission (Includes Bell Crank) Key No. 18 Page 11
2	6364H	Control Knob
3	6213H1	Gear Shift Lever
4	4869H1	Shift Lever Cap
5	4871H	Gear Shift Cover
6	6259H	Shift Lever Guide Ball
7	4924H	Spring
8	1544P	Washer 15/32 x 59/64 x 16 Ga.
9	3139R	Shift Mechanism Seal
10	1569P	Washer 9/16 x 15/16 x 11 Ga.
11	2505P	Cotter Pin 1/8 x ¾
12	624A36	Shift Lever Gate and Reinforcement
13	4913H	Gasket
14		Model Plate
15	4895H	Needle Bearing
16	4002P	Pipe Plug ¾-14 N.P.T.
17	624A57	Gear Case and Bearings-R.H. (Includes Key No. 15, 20 and 22)
18	4878H1	Gear Case Shield R.H.
19	4910H	Oil Seal
20	4896H	Needle Bearing
21	9980M	Dowel Pin
22	4870H	Thrust Cap
23	4912H	Gasket
24	1370H	Thrust Bearing Race
25	B127M	Steel Ball
26	4923H	Detent Spring
27	3149R	Shift Lever Yoke
28	4838H	Shift Block Guide (3 Grooves)
29	4839H	Shift Block Guide (2 Grooves)
30	3140R	Low Speed Pinion
31	4926H	Snap Ring
32	9858M1	Woodruff Key 3/16 x 5/8
33	4841H1	Input Shaft
34	624A42	Reverse Idler and Shaft
35	3142R	High Speed Pinion
36	9204H	Lockout ¾-20
37	3136R	Needle Bearing
38	4895H1	Needle Bearing
39	4877H1	Gear Case Shield L.H.
40	624A56	Gear Case and Bearings L.H. (Includes Key No. 20,22 and 37)
41	2601R	Gasket
42	624A73	Tine Shaft and Sprocket
43	624A3	3rd Reduction Shaft and Gears
44	624A41	2nd Reduction Shaft and Gears
45	4950H	Roller Link
46	4949H	Connecting Link
47	2600R	Roller Chain ASA No. 50
48	1003P	Lockwasher 5/16
49	504P	Hex Nut 5/16-18
A	3010P	Hex Hd. Mach. Screw 5/16-18 x ¾
B	3015P	Hex Bolt 5/16-18 x 2
C	5585P	Slotted Flat Hd. Roll Lok Thread Forming Screw 5/16-18 x 1½
D	5586P	Hex Hd. Roll Lok Thread Forming Screw 5/16-18 x 1½
—	7041R	Owners Manual

GIANT-TILLER MODEL NO. D84351R1

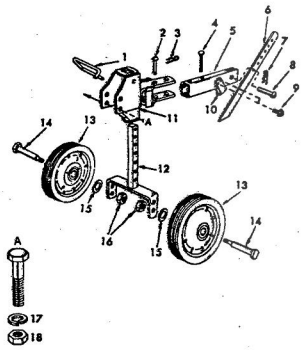

KEY NO.	PART NO.	DESCRIPTION
1	8251H	Support Pin
2	4890H	Drilled Rivet R.H.
3	4935M	Retainer Spring
4	2007P	Rivet R.H. 3/8 x 3
5	624A54	Snake Support and Strap with Spring and Screws (Keys #9 and 10)
6	8256H	Snake
7	4921H	Retainer Spring
8	4889H	Drilled Rivet R.H.
9	5514P	Slotted Hex Washer Hd. Thread Cutting Screw Type 1 ¼ x 20 x ½
10	4925H1	Snake Spring
11	624A55	Wheel Support Bracket Assembly
12	624A33A	Gage Wheel Support and Shaft
13	7037R	Wheel 10 x 2.75W
14	8294H	Shoulder Bolt
15	1557P	Washer 13/32 x 13/16 x 11 Ga.
16	514P	Nylock Nut 3/8-16
17	1004P	Lockwasher 3/8
18	501P	Hex Nut 3/8-16
A	3030P	Hex Bolt 3/8-16 x 2¼

PDF Complete
Your complimentary use period has ended. Thank you for using PDF Complete.
Click Here to upgrade to Unlimited Pages and Expanded Features

REPAIR PARTS
4-CYCLE ENGINE

ALL ENGINE PARTS MUST BE ORDERED AND PURCHASED THROUGH YOUR LOCAL TECUMSEH DEALER.

GIANT-TILLER MODEL NO. D84351R1

MODEL NUMBER: 155107A

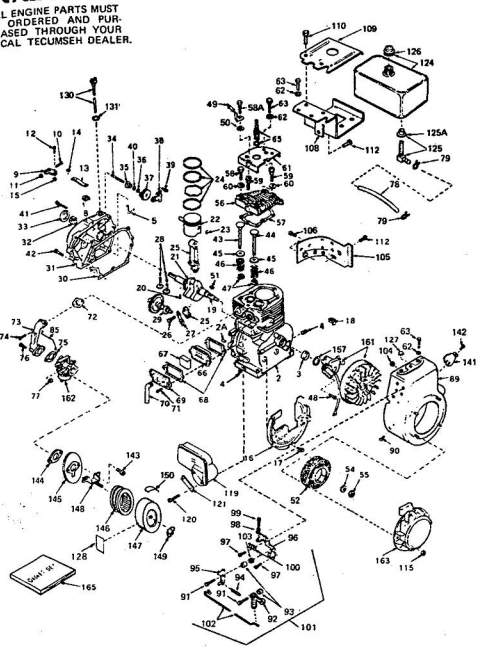

GIANT-TILLER MODEL NO. D84351R1

4-CYCLE ENGINE

MODEL NUMBER: 155107A

Ref. No.	Part No.	Part Name
1	656072	Complete Engine
2	33867	Cylinder Assy. (Incl. Nos. 2A, 3 & 4)
2A	27652	Pin, Dowel
3	32630	Seal, Oil
4	27642	Plug, Oil drain
5	30699B	Rod, Governor
8	29642	Ring, Retaining
9	29916	Clamp, Governor lever
10	29826	Screw, Hex slotted washer hd. mach., 10-32 x 3/4
11	29216	Nut, Square, 10-32
12	650548	Screw, Hex slotted washer hd., 8-32 x 3/8
13	33364	Lever, Governor
14	29918	Lockwasher, No. 8
15	30322	Nut & Lockwasher Assy., 8-32
16	29536	Baffle, Blower housing
17	650561	Screw, Phil. hex hd. Sems, 1/4-20 x 5/8
18	29443	Clip, Fuel line
19	33911	Crankshaft Assy. (Incl. Nos. 20 & 21)
20	29783	Pin, Crankshaft gear
21	33245	Gear, Crankshaft
22	33869	Piston & Pin Assy. (Standard) (Incl. 2 of No. 23)
22	33870	Piston & Pin Assy. (.010 oversize) (Incl. 2 of No. 23)
22	33871	Piston & Pin Assy. (.020 oversize) (Incl. 2 of No. 23)
23	27888	Ring, Piston pin retaining
24	33873	Ring Set, Piston (Standard)
24	33874	Ring Set, Piston (.010 oversize)
24	33875	Ring Set, Piston (.020 oversize)
25	32591B	Rod Assy., Connecting (Incl. Nos. 26 & 27)
26	650662	Screw, Connecting rod
27	32590	Plate, Lock & Oil dipper
28	34034	Lifter, Valve
29	33366	Camshaft (Compression Release)
30	*33253	Gasket, Cylinder cover
31	33367	Cover, Cylinder (Incl. Nos. 32, 33 & 34)
32	33368	Bushing, Crankshaft
33	31950	Seal, Oil
34	31845	Shaft, Mechanical governor
35	30588A	Spool, Governor
36	29193	Ring, Retaining
37	30591	Gear Assy., Governor (Incl. No. 40)
38	33369	Bracket, Governor gear
39	28763	Screw, Hex washer hd. thread-forming, 10-24 x 1/2
40	30590A	Washer, Flat
41	650488	Screw, Hex hd. Sems, 1/4-20 x 1-1/4
42	650493	Screw, Hex hd. Sems, 1/4-20 x 1-3/4
43	33242	Valve, Intake (Standard)
43	33243	Valve, Intake (1/32" oversize)
44	27878A	Valve, Exhaust (Standard) (Incl. No. 47)
44	27880A	Valve, Exhaust (1/32" oversize) (Incl. No. 47)
45	27882	Cap, Upper valve spring
46	27881	Spring, Valve
47	32581	Cap, Lower valve spring
48	650489	Screw, Hex hd. Sems, w/flat-washer, 1/4-20 x 11/16
49	30747	Clip, Spark plug shorting
50	16645	Washer, Lock
51	32589	Key, Flywheel
52	33662	Hub & Screen Assy., Starter
54	650490	Washer, Belleville
55	8116	Nut, Hex, 1/2-20
56	33271	Head, Cylinder
57	*33270	Gasket, Cylinder head
58	650711	Screw, Hex hd. cap, 5/16-18 x 1-5/8
58A	650737	Screw, Phil. hex hd. self-tap, 1/4-20 x 15/32
59	650727	Screw, Special Hex hd. tapped, 5/16-18 x 1-3/4
60	650691	Washer, Flat
61	33272	Cover, Cylinder head
62	26073	Washer, Flat
63	650713	Screw, Hex hd. cap, 5/16-18 x 5/8
65	33636	Plug, Spark
66	28423	Body, Breather
67	28424	Element, Breather
68	*27896	Gasket, Breather cover
69	28425	Cover, Valve spring
70	27627	Tube, Breather
71	650128	Screw, Fil. slotted hd. Sems, 10-24 x 1/2
72	*27915	Gasket, Intake
73	33877	Pipe, Intake
74	650378	Screw, Fil. hd. Sems, 5/16-18 x 1-1/8
75	*33861	Gasket, Carburetor
76	30088A	Screw, Phil. fil. hd. Sems, 1/4-28 x 1
77	29752	Nut, Lock, 1/4-28
78	30705	Line, Fuel
79	26460	Clamp, Fuel line
85	33878	Link, Governor lever-to-throttle
89	33375A	Housing, Blower
90	29747A	Screw, Hex hd. Sems, cap, 5/16-24 x 3/4

*Indicates Parts Included in Gasket Set, Ref. No. 165.

GIANT-TILLER MODEL NO. D84351R1

4-CYCLE ENGINE

MODEL NUMBER: 155107A

Ref. No.	Part No.	Part Name
91	30312	Screw, Hex slotted washer hd. Sems, 10-32 x 1/2
92	30712	Lever, Bellcrank
93	29530	Bushing, Bellcrank
94	33578	Spring, Governor
95	30201A	Lever, Control
96	30199A	Bracket, Control
97	650399	Screw, Phil. fil. hd. Sems, 10-32 x 5/8
98	32924	Spring, Compression
99	650688	Screw, Hex hd., 10-32 x 1-5/16 (Drilled thru)
100	27793	Clip, Conduit
101	730152	Control Assy., Speed (Incl. Nos. 91 thru 97 & 103)
102	33372	Link, Gov. lever-to-bellcrank
103	28562	Bushing
104	30529	Nut, Lock
105	33273	Extension, Blower housing
106	650128	Screw, Fil. slotted hd. Sems, 10-24 x 1/2
108	33381	Bracket Assy., Fuel tank mtg.
109	33383	Bracket, Fuel tank mtg.
110	30688	Screw, Hex hd. cap, Sems, 1/4-20 x 1/2
112	650561	Screw, Phil. hex hd. Sems, 1/4-20 x 5/8
115	29752	Nut, Lock, 1/4-28
119	33756	Muffler
120	650729	Screw, Hex hd. cap, 5/16-18 x 3-3/16
121	31588	Plate, Muffler locking
124	33350	Tank Assy., Fuel (Incl. Nos. 125 & 126)
125	33395	Elbow, Fuel strainer (Incl. No. 125A)
125A	33679	Bushing, Fuel fitting
126	410144B	Cap, Fuel filler
127	33587	Plug, Button
128	30592	Decal, Name & Instruction
130	31297	Dipstick, Oil (Incl. No. 131)
131	*29673	Gasket, Dipstick
141	33013	Cover, Starter bubble
142	650760	Screw, Phil. pan hd. 8-32 x 7/16
143	28820	Screw, Phil. fil. hd. mach., Sems, 10-32 x 1/2
144	*27272	Gasket, Air cleaner
145	33266	Bracket, Air cleaner
146	33268	Element, Air cleaner
147	33269A	Cover, Air cleaner
148	33267	Bracket, Air cleaner
149	650513	Nut, Wing, 1/4-20
150	31752	Decal, Air cleaner
157	33876	Gasket, Stator
161	610842	Magneto (The complete magneto is not available as an assembly. The magneto number is shown for reference purposes only. Order component parts individually, as shown in parts list.)
162	631783	Carburetor (Incl. No. 75)
163	590479	Starter, Rewind
165	33279B	Gasket Set (Incl. items marked *)

*Indicates Parts Included in Gasket Set, Ref. No. 165.

ALL ENGINE PARTS MUST BE ORDERED AND PURCHASED THROUGH YOUR LOCAL TECUMSEH DEALER

GIANT-TILLER MODEL NO. D84351R1

CARBURETOR NO. 631783

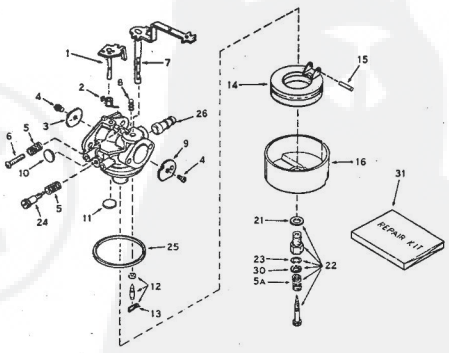

Ref. No.	Part No.	Part Name
	631783	Carburetor
1	631776	Shaft & Lever Assembly, Throttle
2	631777	Spring, Throttle return
3	631778	Shutter, Throttle
4	650506	Screw, Rd. hd. 4-40 x 3/16
5	630766	Spring, Idle regulating screw
5A	630738	Spring, Main adjustment screw
6	650417	Screw, Idle regulating
7	631812	Shaft & Lever Assembly, Choke
8	630735	Spring, Choke positioning
9	631753	Shutter, Choke
10	*631746	Plug, Welch
11	*631027	Plug, Welch
12	*631021	Inlet Needle, Seat & Clip Assembly (Incl. No. 13)
13	631022	Clip, Inlet needle
14	631023	Float, Carburetor
15	*631024	Shaft, Float
16	631867	Bowl, Float
21	27110	Gasket, Bowl-to-body
22	*631781	Adjustment Screw Assembly Main (Incl. Nos. 5A, 21, 23 & 30)
23	630740	"O" Ring, Adjustment screw
24	*630898	Screw, Idle adjustment
25	*631028	Gasket, Bowl-to-body
26	631803	Fuel fitting
30	630739	Washer, Flat
31	631782	Repair Kit (Incl. items marked *)

PDF Complete
Your complimentary use period has ended. Thank you for using PDF Complete.
Click Here to upgrade to Unlimited Pages and Expanded Features

MAGNETO NO. 610842

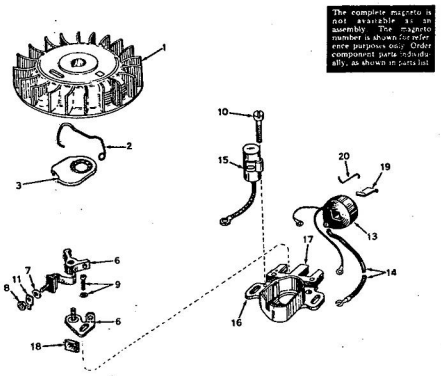

Ref. No.	Part No.	Part Name
	610842	Magneto
1	610841	Flywheel
2	30551	Spring, Breaker box dust cover
3	610883	Cover & Gasket Assy.
6	30547A	Breaker Assembly
7	610385	Washer, Terminal
8	610408	Nut, Terminal
9	29181	Screw and Washer Assembly, Breaker
10	610593	Screw, Condenser fastening
11	30843	Tab, Ground terminal
13	30560A	Coil Assembly (Incl. Ref. No. 14)
14	30554	Wire, Ignition lead
15	30548A	Condenser
16	30545	Core and Plate Group
17	30561A	Stator Assembly (Incl. Nos. 6 thru 16, 18, 19 & 20)
18	30549	Felt, Cam wiper
19	29629	Spring, Coil wedge
20	31311	Clip, Coil locking

REWIND STARTER NO. 590479

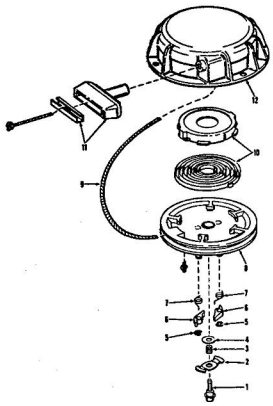

Ref. No.	Part No.	Part Name
	590479	Rewind Starter
1	590480	Screw, Center
2	590481	Cam, Dog
3	590482	Spring, Brake
4	32024	Washer, Brake
5	590483	Ring, Retainer
6	590484	Dog
7	590485	Spring, Dog
8	590486	Pulley & Bearing Assy.
9	590456	Rope, Starter
10	590487	Spring & Keeper Assy.
11	590387	Handle Assy., Starter
12	590488	Housing Assy., Starter