MA.RI.NA. GX 50 L

POS.	CODICE	I	F	D	GB	E	Q.tà
1	CP030612	VITE	VIS	SCHRAUBE	SCREW	TORNILLO	3
2	CP030830	VITE TE	VIS	SCHRAUBE	SCREW	TORNILLO	5
3	CP030840	VITE TE	VIS	SCHRAUBE	SCREW	TORNILLO	2
4	CP032812	RONDELLA	RONDELLE	SCHEIBE	WASHER	ARANDELA	4
5	CP032850	RONDELLA	RONDELLE	SCHEIBE	WASHER	ARANDELA	1
6	CP032907	RONDELLA	RONDELLE	SCHEIBE	WASHER	ARANDELA	3
7	CP032908	RONDELLA	RONDELLE	SCHEIBE	WASHER	ARANDELA	8
8	CP032920	RONDELLA	RONDELLE	SCHEIBE	WASHER	ARANDELA	2
9	CP037406	CHIAVETTA	CLAVETTE	SCHLÜSSELCHEN	WOODRUFF KEY	CHAVETA	1
10	CP038227	CUSCINETTO 12X27	ROULEMENT	KUGELLAGER	BALL BEARING	COJINETE	8
11	CP040850	VITE TTQST	VIS	SCHRAUBE	SCREW	TORNILLO	2
12	CP042216	BLOCCHETTO CAVO F	ATTACHE CABLE FRE	KABELBESCHWERER	CLIP	FIJADOR CABLE	1
13	CP042245	SETTORE	SECTEUR	PLATTE	SECTOR	PLACA ALTURAS	4
14	CP042248	SUPPORTO	SUPPORT	ACHSELAGER	SUPPORT	SOPORTE	4
15	CP042250	LEVA ALZO	LEVIER	STANGE	LEVER	LEVA ALTURAS	4
16	CP042268	VITE	VIS	SCHRAUBE	SCREW	TORNILLO	4
17	CP042806	DADO	ÉCROU	MUTTER	KNOB	ESPARRAGO	5
18	CP042808	DADO	ÉCROU	MUTTER	KNOB	ESPARRAGO	17
19	CP045722	TAPPO	COUVERCLE	KAPPE	CAP	TAPA	2
20	CP047042	MANICO SUP.	GUIDON	STIEL	HANDLE	MANILLAR	1
21	CP047071	LEVA FRENO	LEVIER FREIN	STANGE	LEVER	LEVA	1
22	CP047143	CAVO ACCELERATOR	CABLE GAZ	BESCHLEUNIGER	THROTTLE CABLE	ACELERADOR	1
23	CP047148	CAVO FRENO	CABLE FREIN	KABEL	CABLE	CABLE	1
24	CP047220	COPRIACCELERATOR	BOITE	GETRIEBE	GEAR BOX	CAJA	1
25	CP047242	GANCIO FUNE AVV.	PORTE CABLE	KABELHALTER	CABLE SUPPORT	FIJADOR CABLE	1
26	CP047250	COMANDO ACCELERA	LEVIER	STANGE	THROTTLE LEVER	LEVA	1
27	CP048005.02	CHASSIS	CARTER	GEHÄUSE	DECK	CHASIS	1
28	CP048015	LAMA	LAME	MESSER	BLADE	CUCHILLA	1
29	CP048033	MANICO INF.	GUIDON	STIEL	HANDLE	MANILLAR	1
30	CP048094	DEFLETTORE	DEFLECTEUR	DEFLEKTOR	DEFLECTOR	DEFLETOR	1
31	CP048260	FLANGIA	RONDELLE	SCHEIBE	WASHER	ARANDELA	1
32	CP048272	MOZZO LAMA	PORTE LAME	MESSERHALTER	BLADE ADAPTOR	PORTA CUCHILLA	1
33	CP050106	RUOTA 180	ROUE	RAD	WHEEL	RUEDA	4
34	CP050128	COPRIRUOTA 180	CACHE MOYEU	RADDECKUNG	HUB CAP	TAPA RUEDA	4
35	CP050222	FERMACAVO	ATTACHE CABLE	KABELBESCHWERER	CLIP	FIJADOR CABLE	2
36	CP050228	POMOLO MANICO	ÉCROU	GRIFF	KNOB HANDLE	POMO MANILLAR	2
37	CP050230	RONDELLA	RONDELLE	SCHEIBE	WASHER	ARANDELA	2
38	CP050957	VITE LAMA	VIS	SCHRAUBE	SCREW	TORNILLO	1
39	CP053713	DECALCO	DECALQUE	ETIKETTE	DECAL	CARTEL	1
40	CP053715	DECALCO	DECALQUE	ETIKETTE	DECAL	CARTEL	1
41	CP053813	DECALCO	DECALQUE	ETIKETTE	DECAL	CARTEL	1
42	CP053842	DECALCO	DECALQUE	ETIKETTE	DECAL	CARTEL	1
43	CP053861	DECALCO	DECALQUE	ETIKETTE	DECAL	CARTEL	1
44	CP060640	VITE TC	VIS	SCHRAUBE	SCREW	TORNILLO	2

GX 50 L

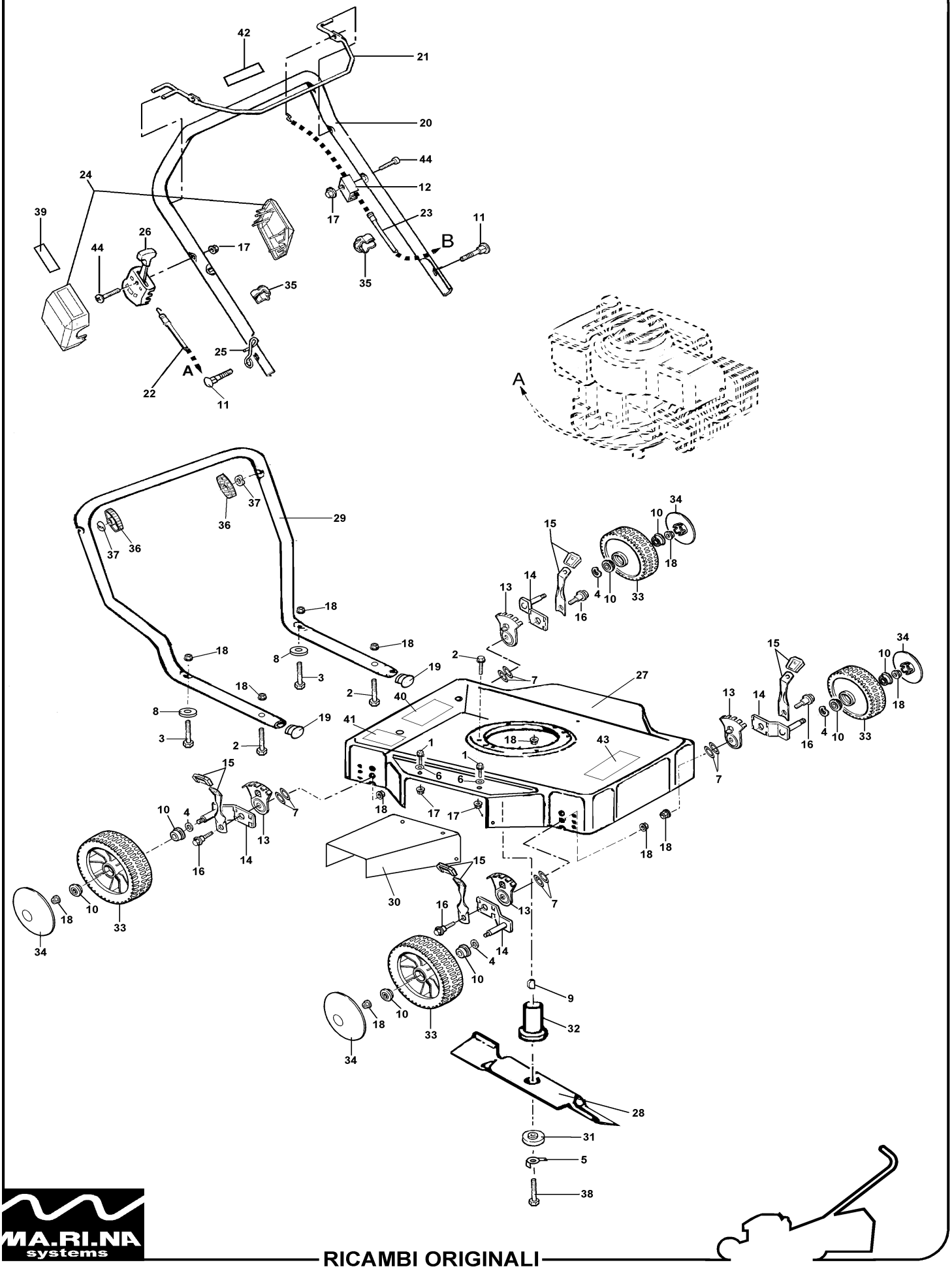
42
21
20
44
12
24
17
23
11
39
26
B
44
17
35
35
25
A
22
11
A
29
37
36
37
36
34
10
15
18
33
4
10
16
13
14
18
18
18
8
3
19
2
7
27
18
2
40
8
19
41
1
18
43
3
2
1
6
6
15
7
10
4
18
17
17
13
14
16
18
18
15
7
30
16
13
14
4
10
9
18
10
33
32
34
28
31
5
38