MA.RI.NA.

GT 47 E

(Old < 1996)

POS.	CODICE	I	F	D	GB	E	QTA'
1	CP017162F	MOTORE EL. 1600 W	MOTEUR	MOTOR	ENGINE	MOTOR	1
2	CP019820	CONDENSATORE 20 MF	CONDENSATEUR	KONDENSATOR	CONDENSER	CONDENSADOR	1
3	CP023925	VITE AUTOF.	VIS	SCHRAUBE	SCREW	TORNILLO	2
4	CP023916	VITE AUTOF.	VIS	SCHRAUBE	SCREW	TORNILLO	2
5	CP025216	VITE AUTOF.	VIS	SCHRAUBE	SCREW	TORNILLO	1
6	CP030816	VITE TE	VIS	SCHRAUBE	SCREW	TORNILLO	6
7	CP042215	FERMACAVO	ATTACHE CABLE	KABELBESCHWERER	CLIP	FIJADOR CABLE	1
8	CP042103	CUPOLINA BIANCA	CALOTTE	VERKLEIDUNG	COVER	CARCASA	1
9	CP032813	RONDELLA	RONDELLE	SCHEIBE	WASHER	ARANDELA	4
10	CP042206	MOZZO LAMA	PORTE LAME	MESSERHALTER	BLADE ADAPTOR	PORTA CUCHILLA	1
11	CP034615	RIVETTO	RIVET	NIET	RIVET	CLAVO	4
12	CP038227	CUSCINETTO 12X27	ROULEMENT	KUGELLAGER	BALL BEARING	COJINETE	8
13	CP042158	VENTOLA	VENTILATEUR	LAUFRAD	FAN	VENTILADOR	1
14	CP042156	VENTOLA	VENTILATEUR	LAUFRAD	FAN	VENTILADOR	1
15	CP042175	BASE MOTORE	PORTE MOTEUR	MOTORGEHÄUSE	MOTOR BOX	BASE MOTOR	1
16	CP042209	VITE LAMA	VIS	SCHRAUBE	SCREW	TORNILLO	1
17	CP050222	FERMACAVO	ATTACHE CABLE	KABELBESCHWERER	CLIP	FIJADOR CABLE	1
18	CP040835	VITE TTQST	VIS	SCHRAUBE	SCREW	TORNILLO	2
19	CP040875	VITE TTQST	VIS	SCHRAUBE	SCREW	TORNILLO	2
20	CP047001	CHASSIS VERDE	CARTER	GEHÄUSE	DECK	CHASIS	1
21	CP047011	LAMA	LAME	MESSER	BLADE	CUCHILLA	1
22	CP047048	ASSALE ANT	AXE AVANT	VORDERACHSE	FRONT AXLE	EJE ANTERIOR	1
23	CP047053	ASSALE POS	AXE ARRIERE	HINTERACHSE	REAR AXLE	EJE POSTERIOR	1
24	CP047063	TIRANTE ASSALE	BARRE	GESTÄNGE	LINK ROD	TIRANTE EJE	1
25	CP050108	RUOTA 180	ROUE	RAD	WHEEL	RUEDA	2
26	CP050128	COPRIRUOTA 180	CACHE MOYEU	RADDECKUNG	HUB CAP	TAPA RUEDA	2
27	CP042185	INTERRUTTORE	INTERRUPTEUR	SCHALTER D-I-F-A-B-NL-E	SWITCH	INTERRUPTOR	1
28	CP042222	SUPPORTO CAVO	PORTE CABLE	KABELHALTER	CABLE SUPPORT	FIJADOR CABLE	1
29	CP042808	DADO	ÉCROU	MUTTER	KNOB	ESPARRAGO	5
30	CP045713	TAPPO	COUVERCLE	KAPPE	CAP	TAPA	1
31	CP045720	TAPPO	COUVERCLE	KAPPE	CAP	TAPA	2
32	CP046606	RITEGNO	CLIP	RÜCKHALT	RETAINER	ANILLO CLIP	1
33	CP046607	RITEGNO	CLIP	RÜCKHALT	RETAINER	ANILLO CLIP	3
34	CP046608	RITEGNO	CLIP	RÜCKHALT	RETAINER	ANILLO CLIP	1
35	CP047018	PARASASSI	DEFLECTEUR	DEFLEKTOR	REAR DOOR	DEFLETOR	1
36	CP047033	MANICO INF.	GUIDON	STIEL	HANDLE	MANILLAR	1
37	CP047038	MANICO SUP.	GUIDON	STIEL	HANDLE	MANILLAR	1
38	CP047078	TELAIO CESTO	ATTELAGE	GRASFANGRAHMEN	FRAME	ARMAZON SACO	1
39	CP047083	TELA CESTO BIANCA	SAC RAMASSEUR	GRASFANGSACK	GRASS BAG	SACO TELA	1
40	CP047191	MOLLA	RESSORT	FEDER	SPRING	MUELLE	1
41	CP047192	MOLLA	RESSORT	FEDER	SPRING	MUELLE	1
42	CP050192	MOLLA PARASASSI	RESSORT	FEDER	SPRING	MUELLE	1
43	CP047203	ASTINA	AXE PIVOT	STANGE	HINGE PIN	EJE DEFLECTOR	1
44	CP047212	SUPPORTO ASSALE	SUPPORT	ACHSELAGER	SUPPORT	SOPORTE	1
45	CP047213	SUPPORTO ASSALE	SUPPORT	ACHSELAGER	SUPPORT	SOPORTE	1
46	CP047214	SUPPORTO ASSALE	SUPPORT	ACHSELAGER	SUPPORT	SOPORTE	2
47	CP047236	CAPPUCCIO	CACHE MOYEU	KAPPE	HOOD	POMO	1
48	CP047255	LEVA ALZO	LEVIER	STANGE	LEVER	LEVA ALTURAS	1
49	CP047267	PERNO	GOUJON	ZAPFEN	PIN	PERNO	1
50	CP050112	RUOTA 200	ROUE	RAD	WHEEL	RUEDA	2
51	CP050130	COPRIRUOTA 200	CACHE MOYEU	RADDECKUNG	HUB CAP	TAPA RUEDA	2
52	CP050212	REGOLATORE MANICO	REGLAGE DE GUIDON	STIELREGULATOR	HANDLE REGULATOR	REGULADOR MANILLAR	4
53	CP050228	POMOLO MANICO	ÉCROU	GRIFF	KNOB HANDLE	POMO MANILLAR	4
54	CP050230	RONDELLA	RONDELLE	SCHEIBE	WASHER	ARANDELA	2
55	CP053714	DECALCO	DECALQUE	ETIKETTE	DECAL	CARTEL	1
56	CP053724	DECALCO	DECALQUE	ETIKETTE	DECAL	CARTEL	1
57	CP053725	DECALCO	DECALQUE	ETIKETTE	DECAL	CARTEL	1
58	CP053802	DECALCO	DECALQUE	ETIKETTE	DECAL	CARTEL	1
59	CP053806	DECALCO	DECALQUE	ETIKETTE	DECAL	CARTEL	1
60	CP053813	DECALCO	DECALQUE	ETIKETTE	DECAL	CARTEL	1
61	CP053896	DECALCO	DECALQUE	ETIKETTE	DECAL	CARTEL	1
62	CP053860	DECALCO	DECALQUE	ETIKETTE	DECAL	CARTEL	1
63	CP053844	DECALCO	DECALQUE	ETIKETTE	DECAL	CARTEL	1
64	CP042214	TAPPO	COUVERCLE	KAPPE	CAP	TAPA	1
65	CP019910	MORSETTO	ATTACHE CABLE	KABELBESCHWERER	CLIP	FIJADOR CABLE	1
66	CP050233	RONDELLA	RONDELLE	SCHEIBE	WASHER	ARANDELA	2
67	CP032913	RONDELLA	RONDELLE	SCHEIBE	WASHER	ARANDELA	2
68	CP037304	CHIAVETTA	CLAVETTE	SCHLÜSSELCHEN	WOODRUFF KEY	CHAVETA	1

GT 47 E (Old < 1996)

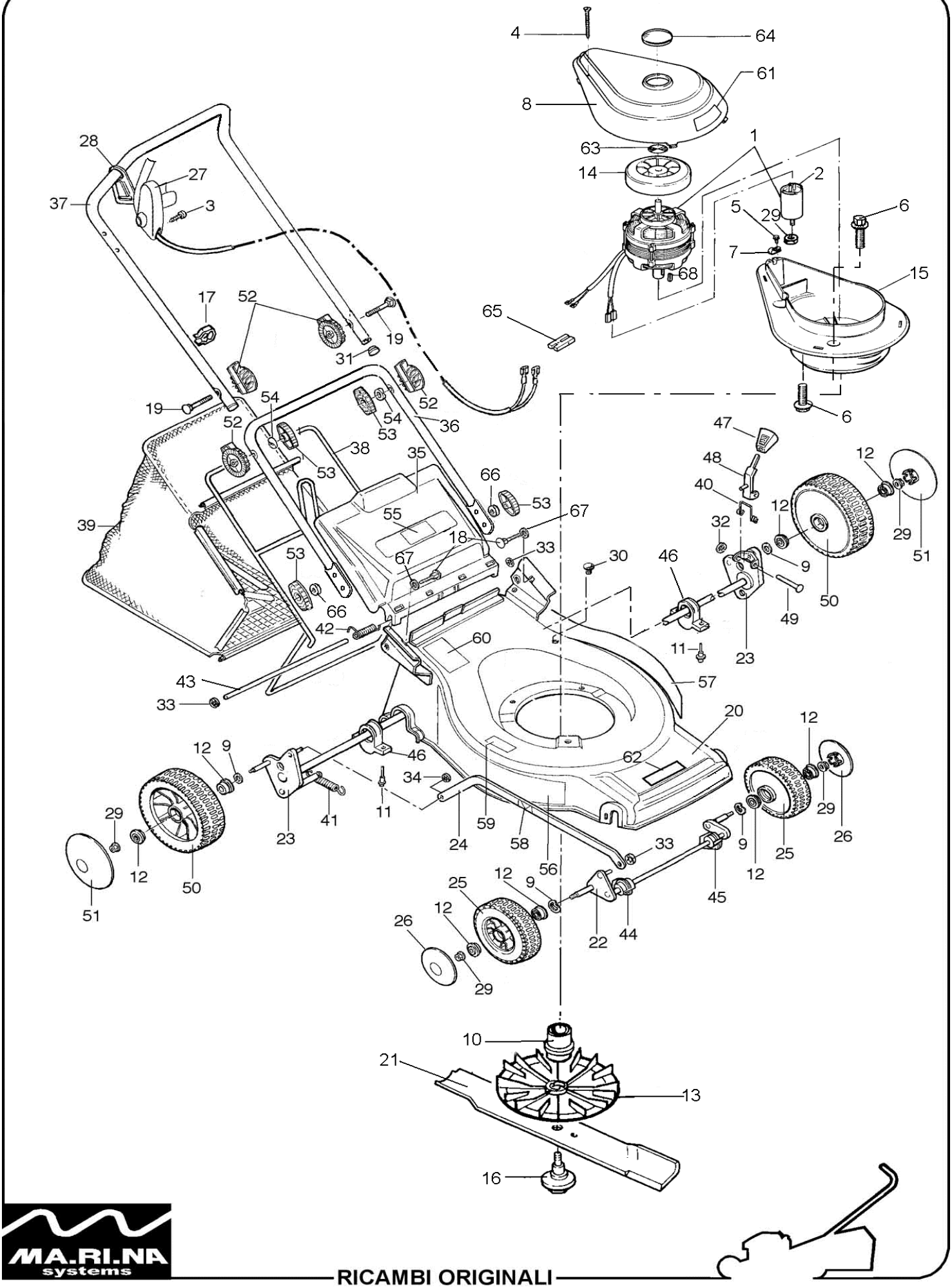

MA.RI.NA systems

RICAMBI ORIGINALI