MA.RI.NA.

GT 40 E ACCU - SP 40 E ACCU

POS.	CODICE	I	F	D	GB	E	GT 40	SP 40
1	CP018124F	MOTORE	MOTEUR	MOTOR	ENGINE	MOTOR	1	1
2	CP018075F	MOTORE ELETT. 24 V	MOTEUR	MOTOR	ENGINE	MOTOR	1	1
3	CP018610	BLOCCO BATTERIE	ACCUMULATEUR	AKKU	BATTERY	ACUMULADOR	1	1
4	CP019615	CARICABATTERIA	CHARGEUR	AKKU-LADEGERÄT	CHARGER	CARGADOR	1	1
5	CP019620	SPINA DI SICUREZZA	GOUPILLE	STACHEL	PIN	PASADOR	1	1
6	CP026338	VITE AUTOF.	VIS	SCHRAUBE	SCREW	TORNILLO	2	2
7	CP030855	VITE TE	VIS	SCHRAUBE	SCREW	TORNILLO	3	3
8	CP032033	MANICO INF.	GUIDON	STIEL	HANDLE	MANILLAR	2	2
9	CP032228	POMOLO MANICO	ÉCROU	GRIFF	KNOB HANDLE	POMO MANILLAR	2	2
10	CP032230	RONDELLA	RONDELLE	SCHEIBE	WASHER	ARANDELA	2	2
11	CP032250	PIASTRINA	PLAQUE	PLÄTTCHEN	PLATE	PLANCHA	4	4
12	CP032908	RONDELLA	RONDELLE	SCHEIBE	WASHER	ARANDELA	1	1
13	CP032910	RONDELLA	RONDELLE	SCHEIBE	WASHER	ARANDELA	3	3
14	CP040001	CHASSIS	CARTER	GEHÄUSE	DECK	CHASIS	1	
14	CP040001.12	CHASSIS	CARTER	GEHÄUSE	DECK	CHASIS		1
15	CP040012	LAMA	LAME	MESSER	BLADE	CUCHILLA	1	1
16	CP040038	MANICO SUPERIORE	GUIDON	STIEL	HANDLE	MANILLAR	1	1
17	CP040078	TELAIO CESTO	ATTELAGE	GRASFANGRAHMEN	FRAME	ARMAZON SACO	1	1
18	CP040083	TELA CESTO BIANCA	SAC RAMASSEUR	GRASFANGSACK	GRASS BAG	SACO TELA	1	
18	CP040083.05	TELA CESTO NERA	SAC RAMASSEUR	GRASFANGSACK	GRASS BAG	SACO TELA		1
19	CP040185	INTERRUTTORE	INTERRUPTEUR	SCHALTER	SWITCH	INTERRUPTOR	1	1
20	CP040203	ASTINA	AXE PIVOT	STANGE	HINGE PIN	EJE DEFLECTOR	1	1
21	CP040208	MOZZO LAMA	PORTE LAME	MESSERHALTER	BLADE ADAPTOR	PORTA CUCHILLA	1	1
22	CP040224	POMOLO RUOTA	AXE ROUE	RADSTIFT	PIN	EJE RUEDA	4	4
23	CP040226	BOCCOLA	BOUCLE	BÜCHSE	BUSH	COJINETE	8	8
24	CP040640	VITE TTQST	VIS	SCHRAUBE	SCREW	TORNILLO	2	2
25	CP042109	RUOTA 150	ROUE	RAD	WHEEL	RUEDA	2	2
26	CP042129	COPRIRUOTA 150	CACHE MOYEU	RADDECKUNG	HUB CAP	TAPA RUEDA	2	2
27	CP045718	TAPPO	COUVERCLE	KAPPE	CAP	TAPA	2	2
28	CP047018	PARASASSI	DEFLECTEUR	DEFLEKTOR	REAR DOOR	DEFLETOR	1	1
29	CP047109	RUOTA 180	ROUE	RAD	WHEEL	RUEDA	2	2
30	CP047193	MOLLA PARASASSI	RESSORT	FEDER	SPRING	MUELLE	1	1
31	CP050129	COPRIRUOTA 180	CACHE MOYEU	RADDECKUNG	HUB CAP	TAPA RUEDA	2	2
32	CP050222	FERMACAVO	ATTACHE CABLE	KABELBESCHWERER	CLIP	FIJADOR CABLE	1	1
33	CP050530	VITE	VIS	SCHRAUBE	SCREW	TORNILLO	2	2
34	CP050844	VITE TE UNF	VIS	SCHRAUBE	SCREW	TORNILLO	1	1
35	CP053714	DECALCO	DECALQUE	ETIKETTE	DECAL	CARTEL	1	1
36	CP053722	DECALCO	DECALQUE	ETIKETTE	DECAL	CARTEL	1	
37	CP053723	DECALCO	DECALQUE	ETIKETTE	DECAL	CARTEL	1	
38	CP053812	DECALCO	DECALQUE	ETIKETTE	DECAL	CARTEL	1	1
39	CP053860	DECALCO	DECALQUE	ETIKETTE	DECAL	CARTEL	1	
39	CP053862	DECALCO	DECALQUE	ETIKETTE	DECAL	CARTEL		1

GT 40 E ACCU - SP 40 E ACCU

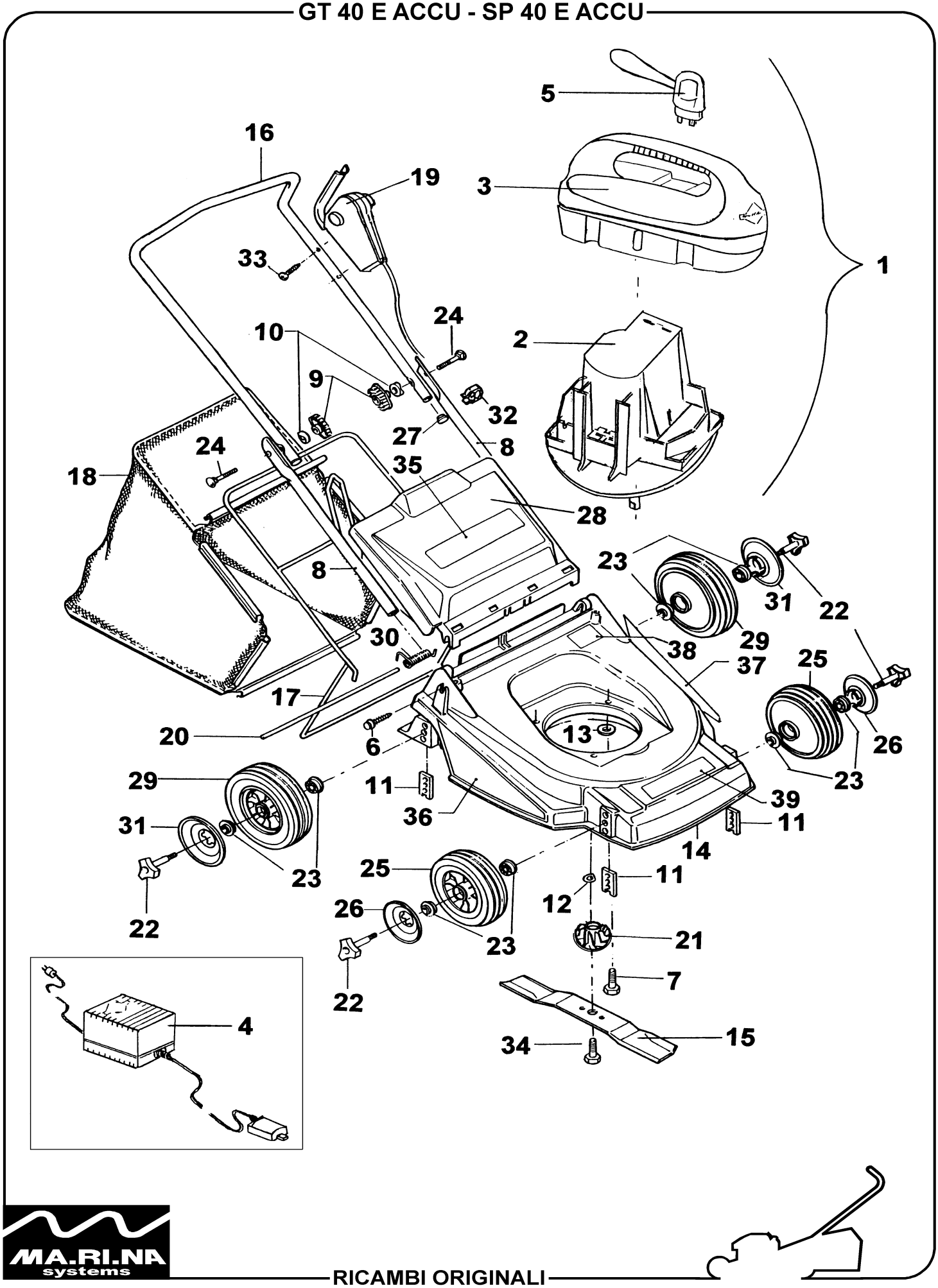

MA.RI.NA systems

RICAMBI ORIGINALI