MA.RI.NA. PLANCIA - VV

POS.	CODICE	I	F	D	GB	E	Q.TA'
1	CP026322	VITE AUTOF.	VIS	SCHRAUBE	SCREW	TORNILLO	1
2	CP032907	RONDELLA	RONDELLE	SCHEIBE	WASHER	ARANDELA	2
3	CP032916	RONDELLA	RONDELLE	SCHEIBE	WASHER	ARANDELA	1
4	CP040630	VITE TTQST	VIS	SCHRAUBE	SCREW	TORNILLO	1
5	CP042216	BLOCCHETTO CAVO FRE	ATTACHE CABLE FREIN	KABELBESCHWERER	CLIP	FIJADOR CABLE	1
6	CP042806	DADO	ÉCROU	MUTTER	KNOB	ESPARRAGO	2
7	CP044906	DADO	ÉCROU	MUTTER	KNOB	ESPARRAGO	2
8	CP050224	LEVA DI COMANDO	LEVIER	STANGE	LEVER	LEVA	2
9	CP050225	PLANCIA GRIGIA 7035	TABLEAU DE BORD	ARMATURENBRETT	DASH-BOARD	PLACA DEL MANILLAR	1
10	CP050243	STAFFETTA REGISTRO	EQUARRE	WINKELMASS	BRACKET	ABRAZDERA CABLE	1
11	CP053238	RONDELLA	RONDELLE	SCHEIBE	WASHER	ARANDELA	1
12	CP053710	DECALCO	DECALQUE	ETIKETTE	DECAL	CARTEL	1
13	CP053712	DECALCO	DECALQUE	ETIKETTE	DECAL	CARTEL	1
14	CP053911	DECALCO	DECALQUE	ETIKETTE	DECAL	CARTEL	1
15	CP056153	CAVO VARIATORE	CABLE VARIATEUR	KABEL	CABLE	CABLE	1
16	CP056238	RONDELLA	RONDELLE	SCHEIBE	WASHER	ARANDELA	1
17	CP060630	VITE TC	VIS	SCHRAUBE	SCREW	TORNILLO	1
18	CP060640	VITE TC	VIS	SCHRAUBE	SCREW	TORNILLO	1
19	CP060645	VITE TC	VIS	SCHRAUBE	SCREW	TORNILLO	1
20	?-TAB-AC-PC	CAVO ACCELERATORE	CABLE GAZ	KABEL	CABLE	CABLE	1
21	?-TAB-FR	CAVO FRENO	CABLE FREIN	KABEL	CABLE	CABLE	1

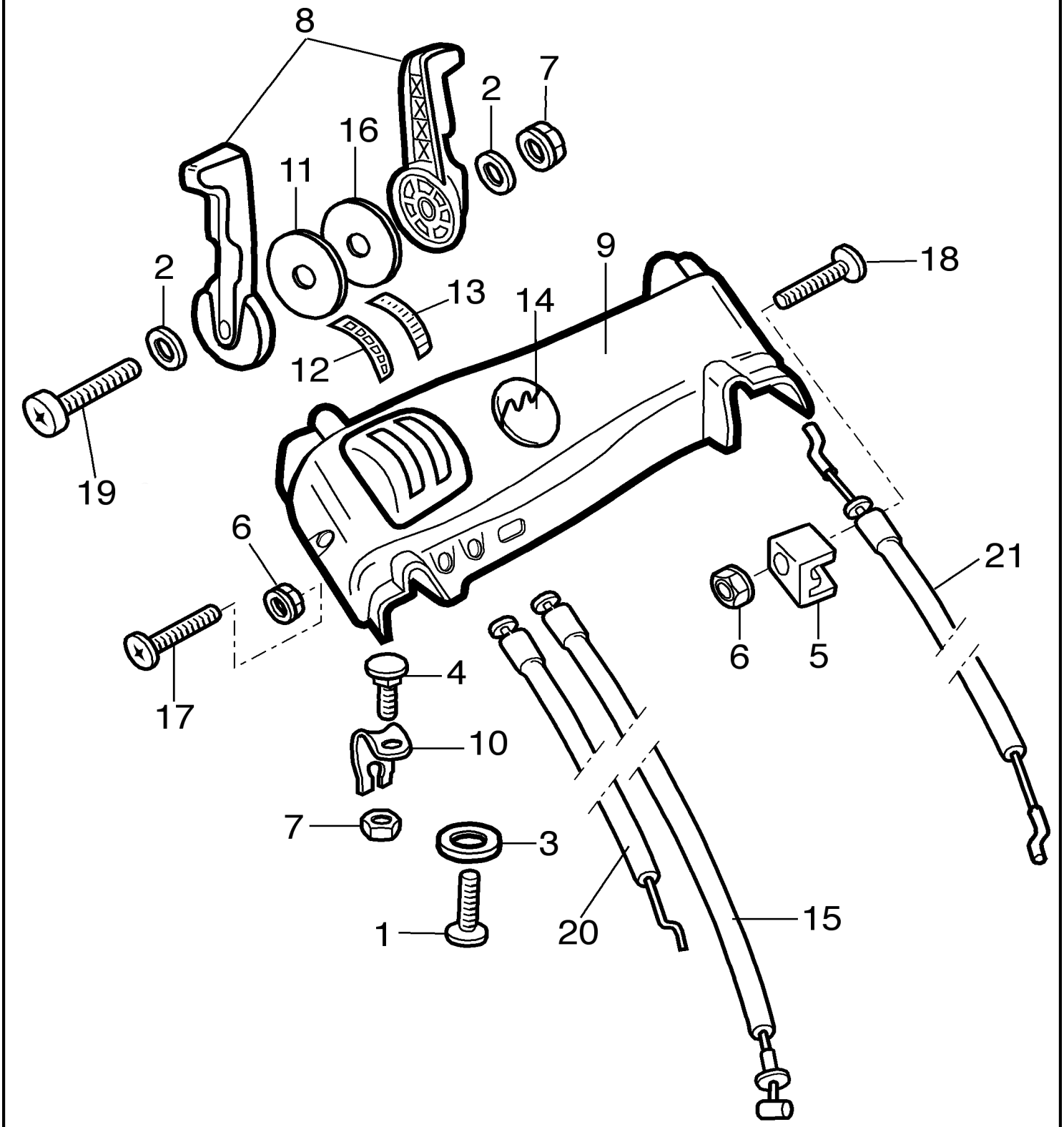
8
7
2
16
11
9
18
2
13
14
12
19
6
21
6
5
17
4
10
7
3
1
20
15