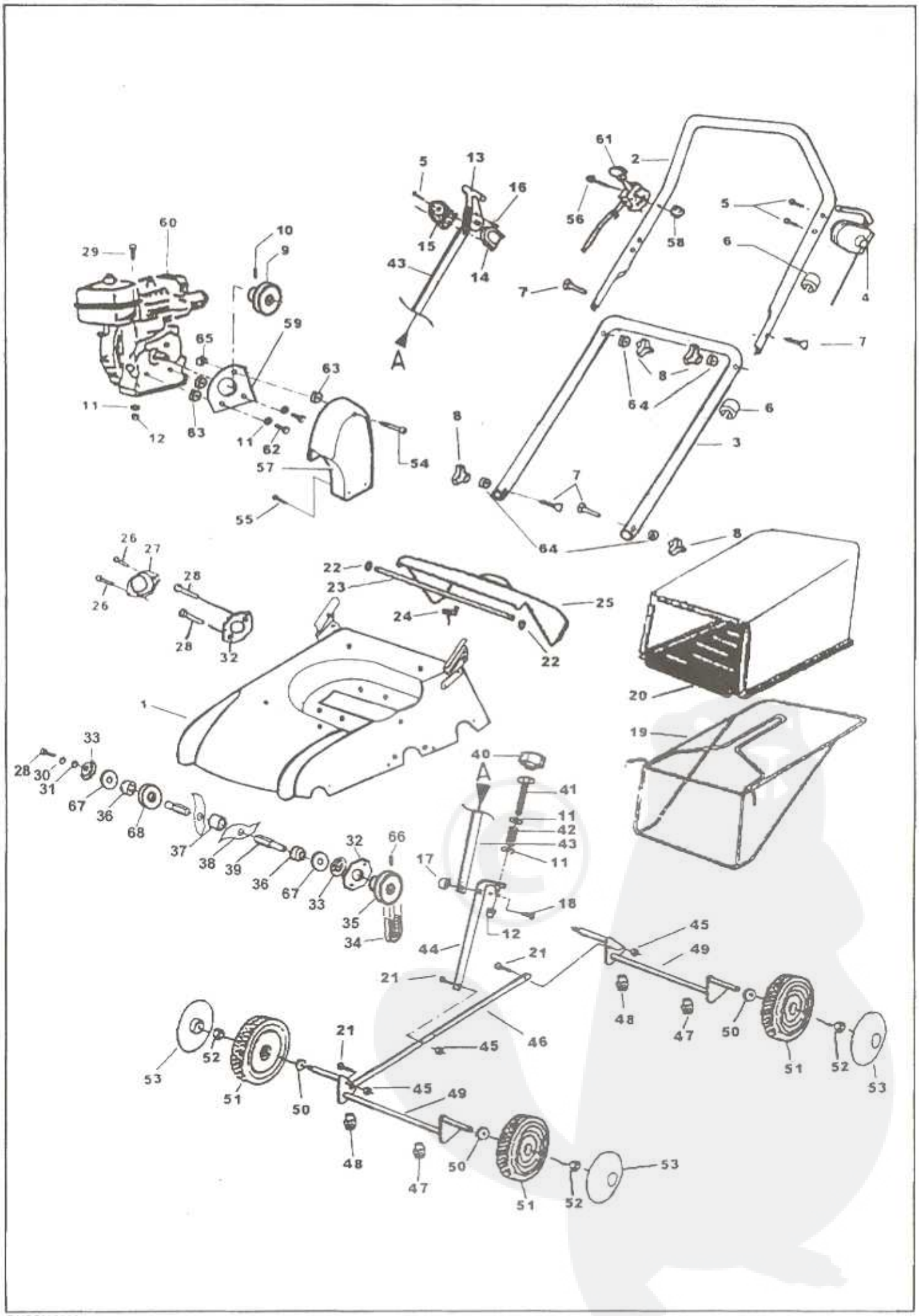
61
2
5
13
16
56
58
5
6
4
60
10
9
29
15
14
43
7
59
65
A
7
63
8
64
6
11
12
63
11
62
8
3
57
54
7
55
64
8
26
27
22
23
28
25
26
24
28
32
22
20
1
19
33
28
30
31
67
36
68
40
A
41
11
42
43
11
37
38
39
36
67
33
32
66
17
35
34
18
12
44
45
21
49
21
48
47
50
51
52
53
21
46
45
53
52
51
50
45
49
48
47
50
53
51
52

# SCARIFICATEUR
SCARIFICATOR
VERTIKUTIERER

# S 390 B

| Fig. | Références | Désignation | Part Name | Bezeichnung | Descrizione | Descripcion | Designação | Omschrijving | |
|---|---|---|---|---|---|---|---|---|---|
| 1 | 73839 | Chassis | Carter | Carter | Scocca | Casco | Carter | Handrijfkap | 1 |
| 2 | 73846 | Guidon | Handlebar | Lenker | Manico | Barra | Guiador | Handgreep | 1 |
| 3 | 73847 | Guidón | Handlebar | Lenker | Manico | Barra | Guiador | Handgreep | 1 |
| 4 | 73806 | Interrupteur | Interruptor | Schalter | Interrutore | Interruptor | Interrotor | Schakelaar | 1 |
| 5 | Z29.4.25 | Vis | Screw | Schraube | Vite | Tornillo | Parafuso | Schroef | 4 |
| 6 | 42032 | Collier | Clip | Klemmschelle | Ferma cavo | Abrazadera | Gancho | Kabelbinder | 2 |
| 7 | Z42.8.50CC | Vis | Screw | Schraube | Vite | Tornillo | Parafuso | Schroef | 4 |
| 8 | 46032 | Ecrou | Nut | Mutter | Dado | Tuerca | Parafuso | Moer | 4 |
| 9 | 73864 | Poulie | Pulley | Treibrad | Pulegga | Polea | Polia | Riemschijf | 1 |
| 10 | 052.8.8 | Vis | Screw | Schraube | Vite | Tornillo | Parafuso | Schroef | 1 |
| 11 | Z08.N8N | Rondelle | Washer | Scheibe | Rondella | Arandela | Anilha | Ring | 11 |
| 12 | Z53.8 | Ecrou | Nut | Mutter | Dado | Tuerca | Parafuso | Moer | 8 |
| 13 | 72489 | Poignée | Clutch | Hebel | Leva | Empuradura | Alavanca | Hendel | 1 |
| 14 | 72487 | Platine G. | Support | Trager | Supporto | Soporte | Hevel | Stern | 1 |
| 15 | 72488 | Platine D. | Support | Trager | Supporto | Soporte | Hevel | Stern | 1 |
| 16 | D13.6.20 | Goupille | Pin | Splint | Spina | Pasador | Pino | Pin | 1 |
| 17 | 73843 | Ecrou | Nut | Mutter | Dado | Tuerca | Parafuso | Moer | 1 |
| 18 | Z42.6.16 | Vis | Screw | Schraube | Vite | Tornillo | Parafuso | Schroef | 1 |
| 19 | 73825 | Armature | Sack Frame | Armatur | Telaio cesto | Armadura | Armadura | Zakarmatur | 1 |
| 20 | 73826 | Sac | Bag | Sack | Tela cesto | Bolsa de recogida | Saco do pixo | Verzamelzak | 1 |
| 21 | Z03.6.20 | Vis | Screw | Schraube | Vite | Tornillo | Parafuso | Schroef | 3 |
| 22 | 46004 | Clips | Clip | Clips | Ritegno | Anel | Clip | Clip | 2 |
| 23 | 73822 | Axe | Axle | Achse | Astina | Eje | Eixo | Wielas | 1 |
| 24 | 73823 | Ressort | Spring | Feder | Molla | Muelle | Mola | Veer | 1 |
| 25 | 73824 | Volet | Deflector | Ablenkblech | Parasassi | Deflector | Deflector | Deflector | 1 |
| 26 | 42010 | Rivet | Screw | Schraube | Vite | Tornillo | Parafuso | Schroef | 2 |
| 27 | 72483 | Cache palier | Cover | Haube | Coperchio | Embellecedor | Calote | Dop | 1 |
| 28 | Z03.8.20 | Vis | Screw | Schraube | Vite | Tornillo | Parafuso | Schroef | 6 |
| 29 | Z03.8.40 | Vis | Screw | Schraube | Vite | Tornillo | Parafuso | Schroef | 4 |
| 30 | Z12.8AZ | Rondelle | Washer | Scheibe | Rondella | Arandela | Anilha | Ring | 2 |
| 31 | 73842 | Rondelle | Washer | Scheibe | Rondella | Arandela | Anilha | Ring | 1 |
| 32 | 72316 | Bride | Plate | Plaquette | Piastrina | Tapa | Platina | Plaat | 2 |
| 33 | 73841 (wx.#LT) | Palier | Spacer | Anstandhäle | Cuscinetto | Cojinete | Separador | Afstandsstuck | 2 |
| 34 | 73872 | Courroie | Belt | Riemen | Cinghia | Correa | Correia | Riem | 1 |
| 35 | 73876 | Poulie | Pulley | Treibrad | Pulegga | Polea | Polia | Riemschijf | 1 |
| 36 | 73836 | Entretoise | Spacer | Abstandsstück | Distanziale | Distanciador | Separador | Afstandsstuck | 2 |
| 37 | 73837 | Entretoise | Spacer | Abstandsstück | Distanziale | Distanciador | Separador | Afstandsstuck | 15 |
| 38 | 73838 | Couteau | Blade | Messer | Zappeta | Cuchilla | Lamina | Mes | 16 |
| 39 | 73875 | Arbre | Shaft | Welle | Assale | Eje | Eixo | Wielas | 1 |
| 40 | 33868 | Bouton | Nut | Mutter | Dado | Tuerca | Parafuso | Moer | 1 |
| 41 | Z03.8.90 | Vis | Screw | Schraube | Vite | Tornillo | Parafuso | Schroef | 1 |
| 42 | 73170 | Ressort | Spring | Feder | Molla | Muelle | Mola | Veer | 1 |
| 43 | 75082 | Tringle | Bar | Stange | Barra | Suporte | Barra | Stern | 1 |
| 44 | 73811 | Tringle | Bar | Stange | Barra | Suporte | Barra | Stern | 1 |
| 45 | Z53.6 | Ecrou | Nut | Mutter | Dado | Tuerca | Parafuso | Maer | 3 |
| 46 | 75083 | Tringle | Bar | Stange | Barra | Supporte | Barra | Stern | 1 |
| 47 | 43255 | Palier | Spacer | Anstandhäle | Cuscinetto | Cojinete | Separador | Afstandsstuck | 2 |
| 48 | 43189 | Palier | Spacer | Anstandhäle | Cuscenitto | Cojinete | Separador | Afstandsstuck | 2 |
| 49 | 75064 | Essieu | Axle | Achse | Astina | Eje | Eixo | Wielas | 2 |
| 50 | D54.12.20 | Rondelle | Washer | Scheibe | Rondella | Arandela | Anilha | Ring | 4 |
| 51 | 46114 | Roue | Wheel | Rad | Ruota | Rueda | Roda | Wiel | 4 |
| 52 | Z53.08F125 | Ecrou | Nut | Mutter | Dado | Tuerca | Parafuso | Moer | 4 |
| 53 | 43131 | Enjoliveur | Hub Cap | Radzierkappe | Copri ruota | Embellecedor | Calote | Dop | 4 |
| 54 | Z26.8.70 | Vis | Screw | Schraube | Vite | Tornillo | Parafuso | Schroef | 1 |
| 55 | Z29.4.16 | Vis | Screw | Schraube | Vite | Tornillo | Parafuso | Schroef | 2 |
| 56 | Z03.6.40 | Vis | Screw | Schraube | Vite | Tornillo | Parafuso | Schroef | 1 |
| 57 | 73828 | Capot | Cover | Haube | Coperchio | Capo | Cobertura | Kap | 1 |
| 58 | 73271 | Ecrou | Nut | Mutter | Dado | Tuerca | Parafuso | Moor | 1 |
| 59 | 73865 | Platine | Support | Trager | Supporto | Pletina | Platina | Plaat | 1 |
| 60 | | Moteur | Engine | Motor | Motore | Motor | Motor | Motor | 1 |
| 61 | 30525.1 | Commande d'accélération | Throttle Control | Gashebelgestange | Accelerator | Manda | Accelerator | Gaskabel | 1 |
| 62 | Z03.742416 | Vis | Screw | Schraube | Vite | Tornillo | Parafuso | Schroef | 2 |
| 63 | 33940 | Entretoise | Spacer | Abstandsstück | Distanziale | Distanciador | Separador | Afstandsstuck | 4 |
| 64 | 46301 | Rondelle | Washer | Scheibe | Rondella | Arandela | Anilhe | Ring | 4 |
| 65 | 31530 | Cache écrou | Plastic Cap | Muttemabdeckung | Copri | Tampon Plastico | Tampao Plastico | Kunstofkrap | 1 |
| 66 | 33940 | Entretoise | Spacer | Abstandsstück | Distanziale | Distanciador | Separador | Afstandsstuck | 3 |
| 67 | | | | | | | | | |