ZB 1200/1400

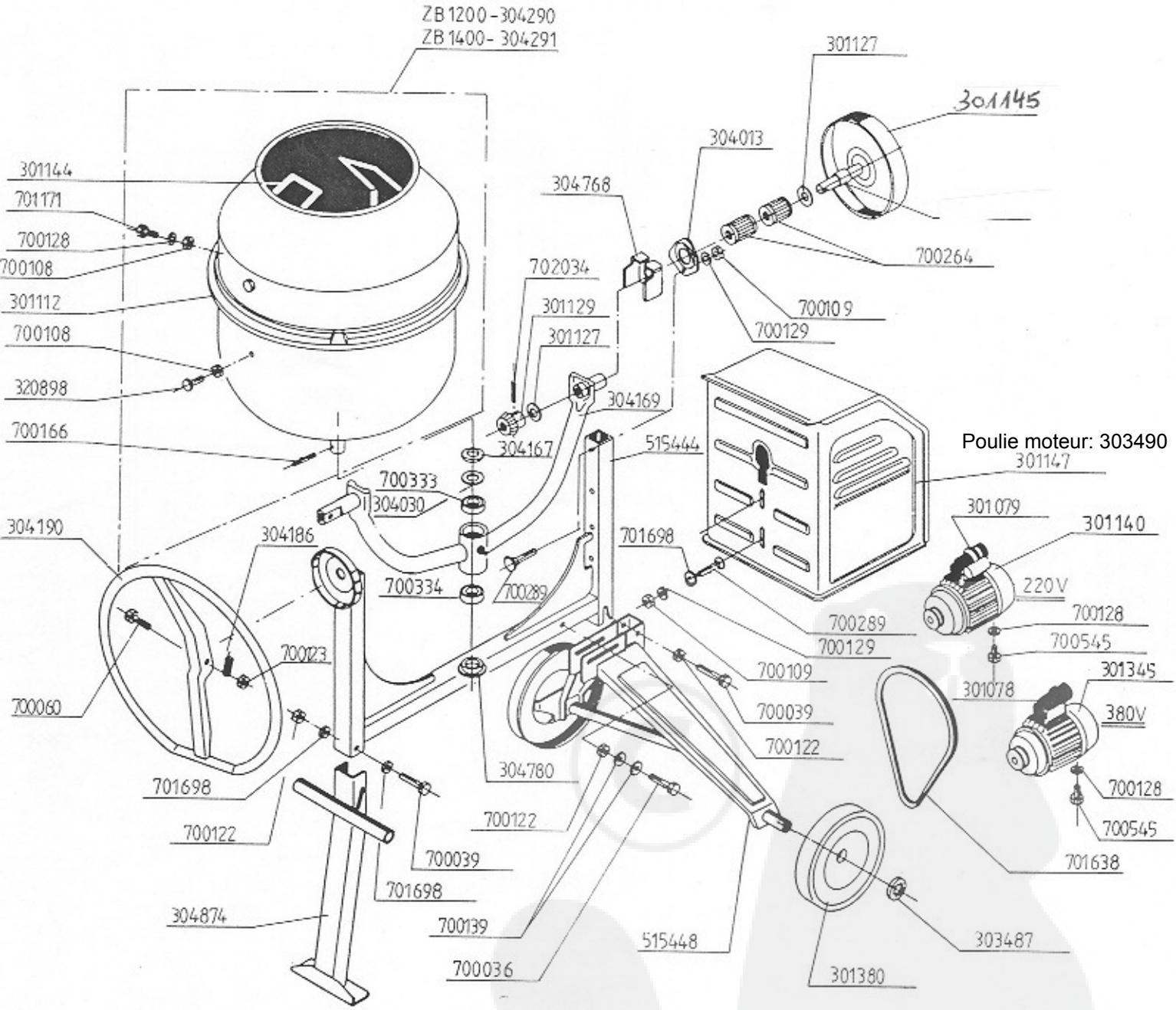

Art.Nr.: 102327 - ZB 1200/220V

102328 - ZB 1200/380V

102330 - ZB 1400/220V

102331 - ZB 1400/380V

515511